City of Tacoma
Department of Public Works

SPECIFICATION NO. PW23-0090F

TPU S 17th Street Court D/E

Project No. PWR-01216-09

Public Works Department

TPU S 17th St Court D/E
PW23-0090F

SPECIFICATIONS
Stamp and Signature Page

Division 1 and Front End (not including 1-10, or 1-07.23(1))

BASEL TAYSEER KITMITTO
STATE OF WASHINGTON
56979
REGISTERED
PROFESSIONAL ENGINEER

DocuSigned by:
Basel Kitmitto
03099E658DF743A...

01/12/2024

Division 2 through 9

RAYMOND D. VAN DER QUEST
STATE OF WASHINGTON
34477
REGISTERED
PROFESSIONAL ENGINEER

1/11/2024

Division 1-10 and 1-07.23(1)

BRIAN A. CHURCHILL
STATE OF WASHINGTON
46567
REGISTERED
PROFESSIONAL ENGINEER

DocuSigned by:
Brian Churchill
361E0FDF66E041...

01/12/2024

SPECIFICATION NO. PW23-0090F

TABLE OF CONTENTS

NOTE: ALL BIDDERS MUST HAVE A COPY OF THE SPECIFICATIONS AND THE BID SUBMITTAL PACKAGE

City of Tacoma
Public Works Engineering

REQUEST FOR BIDS PW23-0090F
TPU S 17th Street Court D/E

Submittal Deadline: 11:00 a.m., Pacific Time, Tuesday, March 5, 2024

Submittals must be received by the City's Procurement and Payables Division prior to 11:00 a.m. Pacific Time.

For electronic submittals, the City of Tacoma will designate the time of receipt recorded by our email, sendbid@cityoftacoma.org, as the official time of receipt. This clock will be used as the official time of receipt of all parts of electronic bid submittals. For in person submittals, the City of Tacoma will designate the time of receipt recorded by the timestamp located at the lobby security desk, as the official time of receipt. Late submittals will be returned unopened and rejected as non-responsive.

Submittal Delivery: Sealed submittals will be received as follows:

By Email:	**In Person:**
sendbid@cityoftacoma.org Maximum file size: 35 MB. Multiple emails may be sent for each submittal	Tacoma Public Utilities Administration Building North, Main Floor, Lobby Security Desk 3628 South 35th Street Tacoma, WA 98409 Monday – Friday 8:00 am to 4:30 pm

Bid Opening: Submittals must be received by the City's Procurement and Payables Division prior to 11:00 a.m. Pacific Time. Sealed submittals in response to a RFB will be opened Tuesday's at 11:15 AM by a purchasing representative and read aloud during a public bid opening held at the Tacoma Public Utilities Administrative Building North, 3628 S. 35th Street, Tacoma, WA 98409, conference room M-1, located on the main floor. They will also be held virtually Tuesday's at 11:15 AM. Attend via this link or call 1 (253) 215 8782. Submittals in response to an RFP, RFQ or RFI will be recorded as received. As soon as possible, after 1:00 PM, on the day of submittal deadline, preliminary results will be posted to www.TacomaPurchasing.org.

Solicitation Documents: An electronic copy of the complete solicitation documents may be viewed and obtained at the City's plan distribution service provider, ARC, 632 Broadway, Tacoma, WA, or by going to http://www.e-arc.com/location/tacoma. Prospective bidders will be required to pay reproduction costs. A list of vendors registered for this solicitation is also available at their website.

Pre-Proposal Meeting: A pre-proposal meeting will not be held.

Project Scope: This Contract shall generally consist of the installation of electrical duct banks and electrical utility vaults, construction of new roadway sections, asphalt grind and overlay, sidewalk replacement, concrete driveway installation, curb/gutter replacement, site restoration, and other work, all in accordance with the attached Contract Plans, these Contract Provisions, and the Standard Specifications.

Estimate: $838,000

Paid Sick Leave: The City of Tacoma requires all employers to provide paid sick leave in accordance with Washington State law.

Americans with Disabilities Act (ADA Information: The City of Tacoma, in accordance with Section 504 of the Rehabilitation Act (Section 504) and the Americans with Disabilities Act (ADA), commits to nondiscrimination on the basis of disability, in all of its programs and activities. Specification materials can be made available in an alternate format by emailing the contact listed below in the *Additional Information* section.

Title VI Information: "The City of Tacoma" in accordance with provisions of Title VI of the Civil Rights Act of 1964, (78 Stat. 252, 42 U.S.C. sections 2000d to 2000d-4) and the Regulations, hereby notifies all bidders that it will affirmatively ensure that in any contract entered into pursuant to this advertisement, disadvantaged business enterprises will be afforded full and fair opportunity to submit bids in response to this invitation and will not be discriminated against on the grounds of race, color, national origin in consideration of award.

Additional Information: Requests for information regarding the specifications may be obtained by contacting Carly Fowler by email to cfowler@cityoftacoma.org.

Protest Policy: City of Tacoma protest policy, located at www.tacomapurchasing.org, specifies procedures for protests submitted prior to and after submittal deadline.

Meeting sites are accessible to persons with disabilities. Reasonable accommodations for persons with disabilities can be arranged with 48 hours advance notice by calling 253-502-8468.

SPECIAL REMINDER TO ALL BIDDERS

HEALTH & SAFETY: Be sure to comply with all City of Tacoma health and safety requirements.

PLEASE NOTE: Be sure you have complied with all specifications and requirements and have signed all required documents.

YOUR ATTENTION IS PARTICULARLY CALLED to the following forms, which must be executed in full and submitted with your bid response:

1. BID PROPOSAL: The unit prices bid must be shown in the space provided. Check your computations for omissions and errors.

2. SIGNATURE PAGE: To be filled in and executed by a duly authorized officer or representative of the bidding entity. If the bidder is a subsidiary or doing business on behalf of another entity, so state, and provide the firm name under which business is hereby transacted.

3. BID BOND: The Bid Bond must be executed by the person legally authorized to sign the bid, and must be properly signed by the representatives of the surety company unless the bid is accompanied by a certified check. If Bid Bond is furnished, the form furnished by the City must be followed; no variations from the language thereof will be accepted. The amount of the Bid Bond must be not less than 5% of the total amount bid.

4. CERTIFICATION OF COMPLIANCE WITH WAGE PAYMENT STATUTES: Bidder shall complete this form in its entirety to ensure compliance.

5. STATE RESPONSIBILITY AND RECIPROCAL BID PREFERENCE INFORMATION: Bidder shall complete this form in its entirety to ensure compliance.

6. EQUITY IN CONTRACTING (EIC) UTILIZATION FORM
   Bidders shall complete the Equity in Contracting Utilization Form in accordance with the City of Tacoma Equity in Contracting Regulations Manual and Chapter 1.07 of the City of Tacoma Municipal Code (TMC). This form shall be fully and accurately completed and returned with submission of the Bid and will be used to determine if the Bidder is in compliance with the EIC regulations and the TMC.

   As part of the City of Tacoma's ongoing work to address past disparities and to increase the City's contracting with and utilization of historically underutilized businesses, the Equity in Contracting (EIC) Program places requirements on City contracts for utilization of businesses certified by the Washington State Office of Minority and Women's Business Enterprise and approved by the Equity in Contracting Program ("Certified Businesses"). The EIC Program also provides guidance and technical assistance to Certified Businesses who are interested in providing supplies, services and public works to the City of Tacoma. The EIC Program requirements are contained in Tacoma Municipal Code Chapter 1.07.

   See City of Tacoma – Equity In Contracting Program section for additional information.

POST AWARD FORMS EXECUTED UPON AWARD:

A. CONTRACT: Must be executed by the successful bidder.

B. PAYMENT BOND TO THE CITY OF TACOMA: Must be executed by the successful bidder and his/her surety company.

C. PERFORMANCE BOND TO THE CITY OF TACOMA: Must be executed by the successful bidder and his/her surety company.

D. CERTIFICATE OF INSURANCE: Shall be submitted with all required endorsements.

E. LEAP UTILIZATION PLAN: Shall be submitted at the Pre-Construction Meeting.

F. GENERAL RELEASE.

CODE OF ETHICS: The successful bidder agrees that its violation of the City's Code of Ethics contained in TMC Chapter 1.46 shall constitute a breach of the contract subjecting the contract to termination.

LOCAL EMPLOYMENT AND APPRENTICESHIP TRAINING PROGRAM (LEAP):

The Local Employment and Apprenticeship Training Program (LEAP) has been adopted to counteract economic and social ills, which accompany high rates of unemployment within the City of Tacoma. The Tacoma City Council established the mandatory LEAP program for public works contracts pursuant to Ordinance No. 28520. The primary goal is to provide an opportunity for City of Tacoma residents and Tacoma Public Utilities ratepayers to enter apprenticeship programs, acquire skills, and perform work that will provide living wages.

Example LEAP Requirements:

1. Local Employment Utilization Requirement – Prime contractor is required to ensure that 15 percent of the labor hours worked on the project are performed by residents of the City of Tacoma or local economically distressed areas, whether or not such person is an Apprentice.

2. Apprentice Utilization Requirement - Prime contractor is required to ensure that 15 percent of the labor hours worked on the project are performed by Apprentices who reside in the Tacoma Public Utilities service area.

NOTE: Depending on the number of requirements assigned to this project, the requirements could be satisfied concurrently. For example if the prime contractor utilizes individuals who simultaneously meet more than one assigned requirement, such as an apprentice who resides in the City of Tacoma or in a local economically distressed area, then the hours worked by that individual will be applied toward both requirements.

See City of Tacoma – Local Employment and Apprenticeship Training Program section for additional information and LEAP Requirements.

CITY OF TACOMA
FINANCE/PURCHASING DIVISION

SPECIAL NOTICE TO BIDDERS

Public works and improvement projects for the City of Tacoma are subject to Washington state law and Tacoma Municipal Code, including, but not limited to the following:

I. STATE OF WASHINGTON

A. RESPONSIBILITY CRITERIA – STATE OF WASHINGTON

In order to be considered a responsible bidder the bidder must meet the following mandatory state responsibility criteria contained in RCW 39.04.350:

1. Have a current certificate of registration as a contractor in compliance with chapters 18.27 RCW, 18.106 RCW, 70.87 RCW, 19.28 RCW, which must have been in effect **at the time of bid submittal**;
2. Have a current Washington Unified Business Identifier (UBI) number;
3. If applicable:
   a. Have Industrial Insurance (workers' compensation) coverage for the bidder's employees working in Washington, as required in Title 51 RCW;
   b. Have a Washington Employment Security Department number, as required in Title 50 RCW;
   c. Have a Washington Department of Revenue state excise tax registration number, as required in Title 82 RCW and;
4. Not be disqualified from bidding on any public works contract under RCW 39.06.010 (unlicensed or unregistered contractors) or 39.12.065(3) (prevailing wage).
5. Have received training on the requirements related to public works and prevailing wage under this chapter and chapter 39.12 RCW and must designate a person or persons to be trained on these requirements. The training must be provided by the department of labor and industries or by a training provider whose curriculum is approved by the department. Bidders that have completed three or more public works projects and have had a valid business license in Washington for three or more years are exempt from this subsection.

B. RECIPROCAL PREFERENCE FOR RESIDENT CONTRACTORS:

Effective March 30, 2012, RCW 39.04.380 imposes a reciprocal preference for resident contractors. Any bid received from a non-resident contractor from a state that provides an in-state percentage bidding preference is subject application of a comparable percentage disadvantage.

A non-resident contractor from a state that provides an in-state percentage bidding preference means a contractor that:

1. Is from a state that provides a percentage bid preference to its resident contractors bidding on public works projects, and
2. Does not have a physical office located in Washington at the time of bidding on the City of Tacoma public works project.

The state of residence for a non-resident contractor is the state in which the contractor was incorporated, or if not a corporation, the state in which the contractor's business entity was formed.

The City of Tacoma will evaluate all non-resident contractors for an out of state bidder preference. If the state of the non-resident contractor provides an in state contractor preference, a comparable percentage disadvantage will be applied to the non-resident contractor's bid prior to contract award. The responsive and lowest and best responsible bidder after application of any non-resident disadvantage will be awarded the contract.

The reciprocal preference evaluation does not apply to public works procured pursuant to RCW 39.04.155, RCW 39.04.280, federally funded competitive solicitations where such agencies prohibit the application of bid preferences, or any other procurement exempt from competitive bidding.

Bidders must provide the City of Tacoma with their state of incorporation or the state in which the business entity was formed and include whether the bidder has a physical office located in Washington.

The bidder shall submit documentation demonstrating compliance with above criteria on the enclosed State Responsibility and Reciprocal Bidder Information form.

C. SUBCONTRACTOR RESPONSIBILITY

1. The Contractor shall include the language of this subcontractor responsibility section in each of its first tier subcontracts, and shall require each of its subcontractors to include the same language of this section in each of their subcontracts, adjusting only as necessary the terms used for the contracting parties. The requirements of this section apply to all subcontractors regardless of tier.

2. At the time of subcontract execution, the Contractor shall verify that each of its first tier subcontractors meets the following bidder responsibility criteria:

    a. Have a current certificate of registration as a contractor in compliance with chapter 18.27 RCW, which must have been in effect at the time of subcontract bid submittal;

    b. Have a current Washington Unified Business Identifier (UBI) number;

    c. If applicable, have:

    a. Have Industrial Insurance (workers' compensation) coverage for the bidder's employees working in Washington, as required in Title 51 RCW;
    b. A Washington Employment Security Department number, as required in Title 50 RCW;
    c. A Washington Department of Revenue state excise tax registration number, as required in Title 82 RCW;
    d. An electrical contractor license, if required by Chapter 19.28 RCW;
    e. An elevator contractor license, if required by Chapter 70.87 RCW and;

3. Not be disqualified from bidding on any public works contract under RCW 39.06.010 (unlicensed or unregistered contractors) or 39.12.065(3) (prevailing wage).

II. CITY OF TACOMA

A. SUPPLEMENTAL RESPONSIBILITY CRITERIA – CITY OF TACOMA:

In order to be considered a responsible bidder, the prospective bidder shall have all of the following qualifications set forth in Tacoma Municipal Code 1.06.262:

1. Adequate financial resources or the ability to secure such resources;
2. The necessary experience, stability, organization and technical qualifications to perform the proposed contract;
3. The ability to comply with the required performance schedule, taking into consideration all existing business commitments;
4. A satisfactory record of performance, integrity, judgment and skills; and
5. Be otherwise qualified and eligible to receive an award under applicable laws and regulations.
    a. Bidder Responsibility. Bidders shall not be in violation of 39.04.350 RCW Bidder Responsibility Criteria - Supplemental Criteria.

In addition to the mandatory bidder responsibility criteria listed immediately above, the City may, in addition to price, consider any or all of the following criteria contained in Tacoma Municipal Code Chapter 1.06.262 in determining bidder responsibility:

1. The ability, capacity, experience, stability, technical qualifications and skill of the respondent to perform the contract;
2. Whether the respondent can perform the contract within the time specified, without delay or interference;
3. Integrity, reputation, character, judgment, experience, and efficiency of the respondents, including past compliance with the City's Ethics Code;
4. Quality of performance of previous contracts;
5. Previous and existing compliance with laws and ordinances relating to contracts or services;
6. Sufficiency of the respondent's financial resources;
7. Quality, availability, and adaptability of the supplies, purchased services or public works to the particular use required;
8. Ability of the respondent to provide future maintenance and service on a timely basis;
9. Payment terms and prompt pay discounts;
10. The number and scope of conditions attached to the submittal;
11. Compliance with all applicable City requirements, including but not limited to the City's Ethics Code and its Equity in Contracting and Local Employment and Apprenticeship Training programs;
12. Other qualification criteria set forth in the specification or advertisement that the appropriate department or division head determines to be in the best interests of the City.

The City may require bidders to furnish information, sworn or certified to be true, to demonstrate compliance with the City responsibility criteria set forth above. If the city manager or director of utilities is not satisfied with the sufficiency of the information provided, or if the prospective respondent does not substantially meet all responsibility requirements, any submittal from such respondent must be disregarded.

B. ADDITIONAL SUPPLEMENTAL CRITERIA – NOT APPLICABLE

C. MODIFICATIONS TO SUPPLEMENTAL CRITERIA

Potential bidders may request modifications to the City's **supplemental criteria** by submitting a written request to the Purchasing Division via email to bids@cityoftacoma.org no later than 5:00 p.m. Pacific Time, three days prior to the submittal deadline. Please include the Specification No. and Title when submitting such requests. Requests must include justification for why certain criteria should be modified. Requests received after this date and time will not be considered.

The City will respond to a timely submitted request prior to the bid opening date. Changes to the supplemental criteria, if warranted, will be issued by addendum to the solicitation documents and posted to the City's website for the attention of all prospective bidders.

D. DETERMINATION OF BIDDER RESPONSIBILITY

If the City determines the bidder does not meet the criteria above and is therefore not a responsible bidder, the City shall notify the bidder in writing with the reasons for its determination. If the bidder disagrees, the bidder may appeal the determination in a manner consistent with the City's Protest Policy. Appeals are coordinated by the Purchasing Division heard by the Procurement and Payables Division manager for contracts less than or equal to $500,000 and by Contracts and Awards Board for contracts greater than $500,000.

PART I

BID PROPOSAL AND CONTRACT FORMS

BID PROPOSAL

SPECIFICATION NO. **PW23-0090F**

TPU S 17th Street Court D/E Project

The undersigned hereby certifies that he/she has examined the location and construction details of work as outlined on the Plans and Specifications for Project No. **PWR-01216** and has read and thoroughly understands the Plans and Specifications and contract governing the work embraced in this improvement and the method by which payment will be made for said work, and hereby proposes to undertake and complete the work embraced in this improvement in accordance with said Plans, Specifications and contract and at the following schedule of rates and prices:

NOTE:
1. Unit prices of all items, all extensions and total amount of bid should be shown. Show unit prices in figures only.
2. The notations below the item numbers refer to the specification section where information may be found regarding each contract item. These notations are intended only as a guide and are not warranted to refer to all specification sections where information may be found.

The bid items are grouped as follows:

Group R: Roadway Bid Items

Group P: Power Utility Bid Items

Group L: Lump Sum Bid Items

Summarize totals as indicated on the pages that follow below:

Contractor's Name:_____
Specification Number: PW23-0090F
TPU S 17th Street Court D/E Project

Group-R: TPU S 17th Street Court D/E Project
Roadway Bid Items R-1 through R-28
Specification No. PW23-0090F

ITEM NO.	ITEM DESCRIPTION	ESTIMATE QUANTITY	UNIT PRICE	TOTAL AMOUNT
R- 1 2-02	Test Hole, per linear foot	100 LF	$	$
R- 2 2-03	Roadway Excavation - CID Contaminated, Incl. Haul, per cubic yard	210 CY	$	$
R- 3 2-03	Unsuitable Foundation Excavation - CID Contaminated, Incl. Haul, per cubic yard	20 CY	$	$
R- 4 2-09	Structure Excavation Class B Incl. Haul - CID Contaminated, per cubic yard	730 CY	$	$
R- 5 2-09	Shoring Class B, per square foot	3,320 SF	$	$
R- 6 2-09	Extra Excavation Class B, CID Contaminated, per cubic yard	100 CY	$	$
R- 7 2-14	Remove Existing Pavement, Type I, Class C6, per square yard	270 SY	$	$
R- 8 2-14	Remove Existing Pavement, Type I, Class CA, per square yard	480 SY	$	$
R- 9 2-15	Remove Curb, per linear foot	293 LF	$	$
R- 10 4-04	Crushed Surfacing Top Course, per ton	1,000 TN	$	$

Contractor's Name:_____

Specification Number: PW23-0090F

ITEM NO.	ITEM DESCRIPTION	ESTIMATE QUANTITY	UNIT PRICE	TOTAL AMOUNT
R- 11 4-04	Recycled Concrete Aggregate, per ton	130 TN	$	$
R- 12 5-04	Planing Bituminous Pavement, per square yard	570 SY	$	$
R- 13 5-04	Temporary Pavement Patch, per ton	20 TN	$	$
R- 14 5-04	Fiber Reinforced HMA CL 1/2" PG 58H-22, per ton	150 TN	$	$
R- 15 7-05	Adjust Existing Manhole, Furnish New Frame and Cover, per each	2 EA	$	$
R- 16 8-02	PSIPE Accolade elm, per each	2 EA	$	$
R- 17 8-02	PSIPE hardy rubber tree, per each	2 EA	$	$
R- 18 8-02	PSIPE American Yellowwood, per each	2 EA	$	$
R- 19 8-04	Cement Conc. Traffic Curb and Gutter, per linear foot	350 LF	$	$
R- 20 8-06	Cement Conc. Driveway Entrance, per square yard	180 SY	$	$
R- 21 8-14	Cement Conc. Sidewalk, per square yard	320 SY	$	$

Contractor's Name:_____

Specification Number: PW23-0090F

ITEM NO.	ITEM DESCRIPTION	ESTIMATE QUANTITY	UNIT PRICE	TOTAL AMOUNT
R- 22 8-15	Quarry Spalls, per ton	10 TN	$ _____	$ _____
R- 23 8-20	Install Conduit, 2-inch Dia. PVC Schedule 80, with Pull Line, per linear foot	330 LF	$ _____	$ _____
R- 24 8-20	Install Type 1 Junction Box, per each	4 EA	$ _____	$ _____
R- 25 8-22	Paint Line, per linear foot	400 LF	$ _____	$ _____

SubTotal, Group R
Unit Bid Item Nos. R-1 through R-25 $ _____ **(1)**

R 26 2-03	Field Adjustment	Force Account	Estimated	$ 5,000.00	(2)
R 27 1-04.4	Minor Change	Force Account	Estimated	$ 10,000.00	(3)
R 28 8-01	Dewatering	Force Account	Estimated	$ 10,000.00	(4)

Total, Group R **(1)+(2)+(3)+(4)** $ _____ **(5)**

Contractor's Name:_____

Specification Number: PW23-0090F

Group-P: TPU S 17th Street Court D/E Project
Power Bid Items P-1 through P-12
Specification No. PW23-0090F

ITEM NO.	ITEM DESCRIPTION	ESTIMATE QUANTITY	UNIT PRICE	TOTAL AMOUNT
P- 1 8-40	Power Utility 818 Vault, per each	2 Each	$ _____	$ _____
P- 2 8-40	Power Utility 814 Vault, per each	1 Each	$ _____	$ _____
P- 3 8-40	Power Utility 687 Vault, per each	1 Each	$ _____	$ _____
P- 4 8-40	Section A Conduit Bank, per linear foot	35 Lin. Ft.	$ _____	$ _____
P- 5 8-40	Section B Conduit Bank, per linear foot	15 Lin. Ft.	$ _____	$ _____
P- 6 8-40	Section C Conduit Bank, per linear foot	55 Lin. Ft.	$ _____	$ _____
P- 7 8-40	Section D Conduit Bank, per linear foot	80 Lin. Ft.	$ _____	$ _____
P- 8 8-40	Section E Conduit Bank, per linear foot	110 Lin. Ft.	$ _____	$ _____
P- 9 8-40	Section F Conduit Bank, per linear foot	22 Lin. Ft.	$ _____	$ _____

Contractor's Name:_____

Specification Number: PW23-0090F

ITEM NO.	ITEM DESCRIPTION	ESTIMATE QUANTITY	UNIT PRICE	TOTAL AMOUNT
P-8-40 10	Section G Conduit Bank, per linear foot	30 Lin. Ft.	$ _____	$ _____
P-8-40 11	Section H Conduit Bank, per linear foot	95 Lin. Ft.	$ _____	$ _____
P-8-40 12	Section I Conduit Bank , per linear foot	108 Lin. Ft.	$ _____	$ _____

SubTotal, Group P
Unit Bid Item Nos. P-1 through P-12 $ _____ **(6)**

10.3% Sales Tax on Power Bid Items (6) * 0.103 $ _____ **(7)**

Total, Group P **(6) + (7)** $ _____ **(8)**

Contractor's Name:_____

Specification Number: PW23-0090F

Group-L: TPU S 17th Street Court D/E Project
Lump Sum Bid Items L-1 through L-13
Specification No. PW23-0090F

ITEM NO.	ITEM DESCRIPTION	ESTIMATE QUANTITY	UNIT PRICE	TOTAL AMOUNT
L- 1 1-05	Project Red Line Drawings	1 Lump Sum	**LUMP SUM**	**$**
L- 2 1-07	SPCC Plan	1 Lump Sum	**LUMP SUM**	**$**
L- 3 1-09	Mobilization	1 Lump Sum	**LUMP SUM**	**$**
L- 4 1-10	Pedestrian Traffic Control	1 Lump Sum	**LUMP SUM**	**$**
L- 5 1-10	Project Temporary Traffic Control	1 Lump Sum	**LUMP SUM**	**$**
L- 6 2-06	Subgrade Maintenance and Protection	1 Lump Sum	**LUMP SUM**	**$**
L- 7 2-17	Site Health and Safety Plan	1 Lump Sum	**LUMP SUM**	**$**
L- 8 2-17	Site Health and Safety Officer	1 Lump Sum	**LUMP SUM**	**$**
L- 9 2-17	Soil Management Plan	1 Lump Sum	**LUMP SUM**	**$**
L- 10 8-01	Erosion Control and Water Pollution Prevention	1 Lump Sum	**LUMP SUM**	**$**

Contractor's Name:_____

Specification Number: PW23-0090F

ITEM NO.	ITEM DESCRIPTION	ESTIMATE QUANTITY	UNIT PRICE	TOTAL AMOUNT
L- 11 8-01	Stormwater Pollution Prevention Plan (SWPPP)	1 Lump Sum	**LUMP SUM**	**$**
L- 12 8-02	Roadside Restoration	1 Lump Sum	**LUMP SUM**	**$**
L- 13 8-21	Permanent Signing	1 Lump Sum	**LUMP SUM**	**$**

Total, Group L
Bid Item Nos. L-1 through L-13 **$** _____ **(9)**

Contractor's Name:_____

Specification Number: PW23-0090F

BID TOTALS SUMMARY:

GROUP R: Roadway Bid Items

GROUP R TOTAL $ _____ (5)

GROUP P: Power Bid Items

GROUP P SUB TOTAL (excluding sales tax) $ _____ (6)

GROUP L: Lump Sum Bid Items

GROUP L TOTAL $ _____ (9)

TOTAL BASE BID (5) + (6) + (9) $ _____
Excluding sales tax

Proposal for Incorporating Recycled Materials into the Project

In compliance with RCW 70A.205.700, the Bidder shall propose below, the total percent of construction aggregate and concrete materials to be incorporated into the Project that are recycled materials. Calculated percentages must be within the amounts allowed in Section 9-03.21(1)E, Table on Maximum Allowable Percent (By Weight) of Recycled Material, of the Standard Specifications.

Proposed total percentage: _____ percent.

Note: Use of recycled materials is highly encouraged within the limits shown above, but does not constitute a Bidder Preference, and will not affect the determination of award, unless two or more lowest responsive Bid totals are exactly equal, in which case proposed recycling percentages will be used as a tie-breaker, per the APWA GSP in Section 1-03.1 of the Special Provisions. Regardless, the Bidder's stated proposed percentages will become a goal the Contractor should do its best to accomplish. Bidders will be required to report on recycled materials actually incorporated into the Project, in accordance with the APWA GSP in Section 1-06.6 of the Special Provisions.

Bidder: _____

Signature of Authorized Official: _____

Date: _____

SIGNATURE PAGE

CITY OF TACOMA
PUBLIC WORKS ENGINEERING

All submittals must be in ink or typewritten, executed by a duly authorized officer or representative of the bidding/proposing entity, and received and time stamped as directed in the **Request for Bids page near the beginning of the specification**. If the bidder/proposer is a subsidiary or doing business on behalf of another entity, so state, and provide the firm name under which business is hereby transacted.

REQUEST FOR BIDS SPECIFICATION NO. PW23-0090F
TPU S17th St Court D/E

The undersigned bidder/proposer hereby agrees to execute the proposed contract and furnish all materials, labor, tools, equipment and all other facilities and services in accordance with these specifications.

The bidder/proposer agrees, by submitting a bid/proposal under these specifications, that in the event any litigation should arise concerning the submission of bids/proposals or the award of contract under this specification, Request for Bids, Request for Proposals or Request for Qualifications, the venue of such action or litigation shall be in the Superior Court of the State of Washington, in and for the County of Pierce.

Non-Collusion Declaration

The undersigned bidder/proposer hereby certifies under penalty of perjury that this bid/proposal is genuine and not a sham or collusive bid/proposal, or made in the interests or on behalf of any person or entity not herein named; and that said bidder/proposer has not directly or indirectly induced or solicited any contractor or supplier on the above work to put in a sham bid/proposal or any person or entity to refrain from submitting a bid/proposal; and that said bidder/proposer has not, in any manner, sought by collusion to secure to itself an advantage over any other contractor(s) or person(s).

_____
Bidder/Proposer's Registered Name

_____
Address

_____
City, State, Zip

_____
Authorized Signatory E-Mail Address

_____
E.I.No. / Federal Social Security Number Used on Quarterly Federal Tax Return, U.S. Treasury Dept. Form 941

_____
E-Mail Address for Communications

_____
Signature of Person Authorized to Enter into Contracts for Bidder/Proposer — Date

_____
Printed Name and Title

_____
(Area Code) Telephone Number / Fax Number

_____
State Business License Number
in WA, also known as UBI (Unified Business Identifier) Number

_____
State Contractor's License Number
(See Ch. 18.27, R.C.W.)

Addendum acknowledgement #1_____ #2_____ #3_____ #4_____ #5_____

THIS PAGE MUST BE SIGNED AND RETURNED WITH SUBMITTAL.

Herewith find deposit in the form of a cashier's check in the amount of $_____ which amount is not less than 5-percent of the total bid.

SIGN HERE_____

BID BOND

KNOW ALL MEN BY THESE PRESENTS:

That we, _____, as Principal, and _____, as Surety, are held and firmly bound unto the City of Tacoma, as Obligee, in the penal sum of _____ _____ dollars, for the payment of which the Principal and the Surety bind themselves, their heirs, executors, administrators, successors and assigns, jointly and severally, by these presents.

The condition of this obligation is such that if the Obligee shall make any award to the Principal for

according to the terms of the proposal or bid made by the Principal therefor, and the Principal shall duly make and enter into a contract with the Obligee in accordance with the terms of said proposal or bid and award and shall give bond for faithful performance thereof, with Surety or Sureties approved by the Obligee; or if the Principal shall, in case of failure to do so, pay and forfeit to the Obligee the penal amount of the deposit specified in the call for bids, then this obligation shall be null and void; otherwise it shall be and remain in full force and effect and the Surety shall forthwith pay and forfeit to the Obligee, as penalty and liquidated damages, the amount of this bond.

SIGNED, SEALED AND DATED THIS _____ DAY OF _____, 20_____.

PRINCIPAL:	SURETY:
_____	_____
_____	_____

_____, 20_____

Received return of deposit in the sum of $ _____

_____

City of Tacoma

Certification of Compliance with Wage Payment Statutes

The bidder hereby certifies that, within the three-year period immediately preceding the bid solicitation date (February 13, 2024), that the bidder is not a "willful" violator, as defined in RCW 49.48.082, of any provision of chapters 49.46, 49.48, or 49.52 RCW, as determined by a final and binding citation and notice of assessment issued by the Department of Labor and Industries or through a civil judgment entered by a court of limited or general jurisdiction.

I certify under penalty of perjury under the laws of the state of Washington that the foregoing is true and correct.

_____
Bidder

_____
Signature of Authorized Official*

_____
Printed Name

_____
Title

_____ _____ _____
Date City State

Check One:

Individual ☐ Partnership ☐ Joint Venture ☐ Corporation ☐

State of Incorporation, or if not a corporation, the state where business entity was formed:

_____

If a co-partnership, give firm name under which business is transacted:

_____

** If a corporation, proposal must be executed in the corporate name by the president or vice-president (or any other corporate officer accompanied by evidence of authority to sign). If a co-partnership, proposal must be executed by a partner.*

Specification No. _____

Name of Bidder: _____

State Responsibility and Reciprocal Bid Preference Information

Certificate of registration as a contractor (Must be in effect at the time of bid submittal):	Number:_____ Effective Date: _____ Expiration Date: _____
Current Washington Unified Business Identifier (UBI) Number:	Number:_____
Do you have industrial insurance (workers' compensation) Coverage nor your employees working in Washington?	☐ Yes ☐ No ☐ Not Applicable
Washington Employment Security Department Number	Number: _____ ☐ Not Applicable
Washington Department of Revenue state excise tax Registration number:	Number:_____ ☐ Not Applicable
Have you been disqualified from bidding any public works contracts under RCW 39.06.010 or 39.12.065(3)?	☐ Yes ☐ No If yes, provide an explanation of your disqualification on a separate page.
Do you have a physical office located in the state of Washington?	☐ Yes ☐ No
If incorporated, in what state were you incorporated?	State:_____☐ Not Incorporated
If not incorporated, in what state was your business entity formed?	State: _____
Have you completed the training required by RCW 39.04.350, or are you on the list of exempt businesses maintained by the Department of Labor and Industries?	☐ Yes ☐ No

EIC REQUIREMENT FORM

EQUITY IN CONTRACTING REQUIREMENTS & PROCEDURES:

All bidders must complete and submit with their bid the following solicitation form contained in the bid submittal package:

City of Tacoma – EIC Utilization Form

IMPORTANT NOTE:

It is the bidder's responsibility to ensure that the subcontractor(s) listed on the EIC Utilization Form are currently certified by the State of Washington's Office of Minority and Women Business Enterprises (OMWBE) at the time of bid opening. This may be verified by contacting the EIC Office at 253-591-5075 between 8 AM and 5 PM, Monday through Friday or the OMWBE Office at (866) 208-1064. Please refer to the City of Tacoma EIC code.

EQUITY IN CONTRACTING REQUIREMENTS

Minority Business Enterprise Requirement	Women Business Enterprise Requirement	Small Business Enterprise Requirement
8%	**2%**	**8%**

A list of EIC-eligible companies is available on the following web site addresses:

www.omwbe.diversitycompliance.com*

MATERIAL MISSTATEMENTS CONCERNING COMPLETED ACTIONS BY THE BIDDER IN ANY SWORN STATEMENT OR FAILURE TO MEET COMMITMENTS AS INDICATED ON THE EIC UTILIZATION FORM MAY RENDER THE BIDDER IN DEFAULT OF CITY ORDINANCE 1.07

CCD/EIC: PWR-01216-09-01
Date of Record: 01/10/2024
Project Spec#: PW23-0090F
Project Title: TPU S17th St Court D/E

***For the OMWBE list, be sure to look for businesses in Pierce, King, Lewis, Mason, Grays Harbor, Thurston, or any counties adjacent to the county in which the work is performed per 1.07.050(2)(b-c). Contact the EIC Office if you have any questions.**

City of Tacoma
Community & Economic Development
Office of Equity in Contracting
747 Market Street, Rm 900
Tacoma WA 98402
253-591-5826
Email: EICOffice@cityoftacoma.org

EQUITY IN CONTRACTING UTILIZATION FORM

This form is to document **only** the contractors, subcontractors, material suppliers or other types of firms that are intended to be used to meet the stated EIC requirements for the contract awarded from this solicitation. This information will be used to determine contract award. Additional forms may be used if needed.

- You must include this form with your bid submittal in order for your bid to be responsive.
- Prime contractors are **required** to solicit bids from Businesses that are "Certified" by the Office of Minority and Women's Business Enterprises (OMWBE) www.omwbe.wa.gov as a MBE, WBE, and SBE to be know as "Certified Business".
- It is the Prime contractor's responsibility to verify the certification status of the business(s) intended to be utilized prior to the submittal deadline.

Bidder's Name:_____

Address:_____ City/State/Zip: _____

Spec. No. _____ Base Bid * $_____ **Complete business names and phone numbers are required to verify your usage of Certified Businesses**

a. Business Name and Certification Number(s)	**b.** MBE, WBE, or SBE (Write all that apply)	**c.** NAICS code(s)	**d.** Contractor Bid Amount (100%)	**e.** Material Supplier Bid Amount (20%)	**f.** Estimated MBE Usage Dollar Amount	**g.** Estimated WBE Usage Dollar Amount	**h.** Estimated SBE Usage Dollar Amount
i. MBE Utilization %	**j.** WBE Utilization %		**k.** SBE Utilization %				

By signing and submitting this form the bidder certifies that the OMWBE Certified Business(s) listed will be used on this project including all applicable change orders.

_____ _____ _____

Type or Print Name of Responsible Officer / Title **Signature of Responsible Officer** **Date**

INSTRUCTIONS FOR COMPLETING
EIC UTILIZATION FORM

The purpose of these instructions is to assist bidders in properly completing the EIC Utilization Form.

This form when submitted with your bid, provides information to the City of Tacoma to accurately review and evaluate your proposed EIC usage.

1. * Base Bid is the prime contractor's bid, plus any alternates, additives and deductibles selected by the City of Tacoma. Also, please refer to Items #10-12 below.

2. Column "a" – List all **Certified Business(s)** that you will be awarding a contract to if you are the successful bidder.

3. Column "b" – Identify if the **Certified Business(s)** is being utilized as an MBE, WBE, or SBE. (Businesses may count towards multiple requirements).

4. Column "c" – List the appropriate NAICS code(s) for the scope of work, services, or materials/supplies for each **Certified Business**.

5. Column "d" – The bid amount must be indicated for ***all*** listed **Certified Businesses** that you plan on doing business with. This quote is the price that you and the **Certified Businesses** have negotiated prior to bid opening.

6. Column "e" – The bid amount must be indicated for ***all*** listed **Certified Businesses** that you plan on doing business with. This quote is the price that you and the material supplier have negotiated prior to bid opening.

7. Column "f" – Estimated MBE Usage Dollar Amount: For all MBE firms used, multiply the amount in Column "d" by 1.0 plus the amount in Column "e" by 0.20. Insert the total amount in this column.

8. Column "g" – Estimated WBE Usage Dollar Amount: For all WBE firms used, multiply the amount in Column "d" by 1.0 plus the amount in Column "e" by 0.20. Insert the total amount in this column.

9. Column "h"– Estimated SBE Usage Dollar Amount: For all MBE, WBE, or SBE firms used, Multiply the amount in Column "d" by 1.0 plus the amount in Column "e" by 0.20. Insert the total amount in this column.

10. Block "i" – The percentage of actual MBE utilization calculated on the Base Bid only. (Divide the sum of Estimated MBE Usage Dollar Amount (Column "f") by your Base Bid (*) then multiply by 100 to get a percentage: $ amounts from column "f" divided by Base Bid (*) x 100 = MBE usage as a percentage of the Base Bid.)

11. Block "j" – The percentage of actual WBE utilization calculated on the Base Bid only. (Divide the sum of Estimated WBE Usage Dollar Amount (Column "g") by your Base Bid (*) then multiply by 100 to get a percentage: $ amounts from column "g" divided by Base Bid (*) x 100 = WBE usage as a percentage of the Base Bid).

12. Block “k” – The percentage of actual SBE utilization calculated on the Base Bid only. (Divide the sum of Estimated SBE Usage Dollar Amount (Column “h”) by your Base Bid (*) then multiply by 100 to get a percentage: $ amounts from column “h” divided by Base Bid (*) x 100 = SBE usage as a percentage of the Base Bid.)

It is the prime contractor’s responsibility to check the status of **Certified Businesses** prior to bid opening. Call the EIC Office at 253-591-5826 or email at EICOffice@cityoftacoma.org for additional information.

CONTRACT

Resolution No.
Contract No.

This Contract is made and entered into effective as of [Month], [Day], [Year] ("Effective Date") by and between the City of Tacoma, a Municipal Corporation of the State of Washington ("City"), and [supplier name as it appears in Ariba, including dbas or trade names] ("Contractor").

That in consideration of the mutual promises and obligations hereinafter set forth the Parties hereto agree as follows:

I. Contractor shall fully execute and diligently and completely perform all work and provide all services and deliverables described herein and in the items listed below each of which are fully incorporated herein and which collectively are referred to as "Contract Documents":

1. Specification No. [Spec Number] [Spec Title] together with all authorized addenda.
2. Contractor's submittal [or specifically described portions thereof] dated [Enter Submittal Date] submitted in response to Specification No. [Spec Number] [Spec Title].
3. Describe with specific detail and list separately any other documents that will make up the contract (fee schedule, work schedule, authorized personnel, etc.) or any other additional items mutually intended to be binding upon the parties.

II. If federal funds will be used to fund, pay or reimburse all or a portion of the services provided under the Contract, the terms and conditions set forth at this Appendix A are incorporated into and made part of this Contract and CONTRACTOR will comply with all applicable provisions of Appendix A and with all applicable federal laws, regulations, executive orders, policies, procedures, and directives in the performance of this Contract.

If CONTRACTOR's receipt of federal funds under this Contract is as a sub-recipient, a fully completed Appendix B, "Sub-recipient Information and Requirements" is incorporated into and made part of this Contract.

III. In the event of a conflict or inconsistency between the terms and conditions contained in this document entitled Contract and any terms and conditions contained the above referenced Contract Documents the following order of precedence applies with the first listed item being the most controlling and the last listed item the least controlling:

1. Contract, inclusive of Appendices A and B.
2. List remaining Contract Documents <u>in applicable controlling order.</u>

IV. The Contract terminates on xxxxx, and may be renewed for xxxxxxxx

V. The total price to be paid by City for Contractor's full and complete performance hereunder, including during any authorized renewal terms, may not exceed:
$[Dollar Amount], plus any applicable taxes.

VI. Contractor agrees to accept as full payment hereunder the amounts specified herein and in Contract Documents, and the City agrees to make payments at the times and in the manner and upon the terms and conditions specified. Except as may be otherwise provided herein or in Contract Documents Contractor shall provide and bear the expense of all equipment, work and labor of any sort whatsoever that may be required for the transfer of materials and for constructing and completing the work and providing the services and deliverables required by this Contract.

VII. The City's preferred method of payment is by ePayables (Payment Plus), followed by credit card (aka procurement card), then Electronic Funds Transfer (EFT) by Automated Clearing House (ACH), then check or other cash equivalent. CONTRACTOR may be required to have the capability of accepting the City's ePayables or credit card methods of payment. The City of Tacoma will not accept price changes or pay additional fees when ePayables (Payment Plus) or credit card is used. The City, in its sole discretion, will determine the method of payment for this Contract.

SAMPLE

VIII. Failure by City to identify a deficiency in the insurance documentation provided by Contractor or failure of City to demand verification of coverage or compliance by Contractor with the insurance requirements contained in the Contract Documents shall not be construed as a waiver of Contractor's obligation to maintain such insurance.

IX. Contractor and for its heirs, executors, administrators, successors, and assigns, does hereby agree to the full performance of all the requirements contained herein and in Contract Documents.

It is further provided that no liability shall attach to City by reason of entering into this Contract, except as expressly provided herein.

IN WITNESS WHEREOF, the Parties hereto have accepted and executed this Contract, as of the Effective Date stated above, which shall be Effective Date for bonding purposes as applicable.

CITY OF TACOMA:	CONTRACTOR:
Signature:	Signature:
Name:	Name:
Title:	Title:

(City of Tacoma use only - blank lines are intentional)

Director of Finance: _____

Deputy/City Attorney (approved as to form): _____

Approved By: _____

Approved By: _____

Approved By: _____

Approved By: _____

Approved By: _____

Approved By: _____

SAMPLE

APPENDIX A
FEDERAL FUNDING

1. **Termination for Breach**

CITY may terminate this Contract in the event of any material breach of any of the terms and conditions of this Contract if CONTRACTOR's breach continues in effect after written notice of breach and 30 days to cure such breach and fails to cure such breach.

2. **Prevailing Wages**

1. If federal, state, local, or any applicable law requires CONTRACTOR to pay prevailing wages in connection with this Contract, and CONTRACTOR is so notified by the CITY, then CONTRACTOR shall pay applicable prevailing wages and otherwise comply with the Washington State Prevailing Wage Act (RCW 39.12) in the performance of this Contract.

2. If applicable, a Schedule of Prevailing Wage Rates and/or the current prevailing wage determination made by the Secretary of Labor for the locality or localities where the Contract will be performed is made of part of the Contract by this reference. If prevailing wages apply to the Contract, CONTRACTOR and its subcontractors shall:

   i. Be bound by and perform all transactions regarding the Contract relating to prevailing wages and the usual fringe benefits in compliance with the provisions of Chapter 39.12 RCW, as amended, the Washington State Prevailing Wage Act and/or the Davis-Bacon Act (40 U.S.C. 3141- 3144, and 3146-3148) and the requirements of 29 C.F.R. pt. 5 as may be applicable, including the federal requirement to pay wages not less than once a week.

   ii. Ensure that no worker, laborer or mechanic employed in the performance of any part of the Contract shall be paid less than the prevailing rate of wage specified on that Schedule and/or specified in a wage determination made by the Secretary of Labor (unless specifically preempted by federal law, the higher of the Washington state prevailing wage or federal Davis-Bacon rate of wage must be paid.

   iii. Immediately upon award of the Contract, contact the Department of Labor and Industries, Prevailing Wages section, Olympia, Washington and/or the federal Department of Labor, to obtain full information, forms and procedures relating to these matters. Per such procedures, a Statement of Intent to Pay Prevailing Wages and/or other or additional documentation required by applicable federal law, must be submitted by CONTRACTOR and its subcontractors to the CITY, in the manner requested by the CITY, prior to any payment by the CITY hereunder, and an Affidavit of Wages Paid and/or other or additional documentation required by federal law must be received or verified by the CITY prior to final Contract payment.

3. **COPELAND ANTI-KICKBACK ACT**

For Contracts subject to Davis Bacon Act the following clauses will be incorporated into the Contract:

A. CONTRACTOR shall comply with 18 U.S.C. § 874, 40 U.S.C. § 3145, and the requirements of 29 C.F.R. pt. 3 as may be applicable, which are incorporated by reference into this Contract.

B. CONTRACTOR or subcontractor shall insert in any subcontracts the clause above and such other clauses federal agencies may by appropriate instructions require, and also a clause requiring the subcontractors to include these clauses in any lower tier subcontracts.

SAMPLE

The prime contractor shall be responsible for the compliance by any subcontractor or lower tier subcontractor with all of these Contract clauses.

C. Breach. A breach of the contract clauses above may be grounds for termination of the contract, and for debarment as a contractor and subcontractor as provided in 29 C.F.R. § 5.12.

4. EQUAL EMPLOYMENT OPPORTUNITY

During the performance of this Contract, CONTRACTOR will not discriminate against any employee or applicant for employment because of race, color, religion, sex, sexual orientation, gender identity, or national origin. If the CONTRACTOR does over $10,000 in business a year that is funded, paid or reimbursed with federal funds, CONTRACTOR will take specific and affirmative action to ensure that applicants are employed, and that employees are treated during employment without regard to their race, color, religion, sex, sexual orientation, gender identity, or national origin. Such action shall include, but not be limited to the following:

A. Employment, upgrading, demotion, or transfer; recruitment or recruitment advertising; layoff or termination; rates of pay or other forms of compensation; and selection for training, including apprenticeship. CONTRACTOR agrees to post in conspicuous places, available to employees and applicants for employment, notices to be provided setting forth the provisions of this nondiscrimination clause.

B. CONTRACTOR will, in all solicitations or advertisements for employees placed by or on behalf of the Contractor, state that all qualified applicants will receive consideration for employment without regard to race, color, religion, sex, sexual orientation, gender identity, or national origin.

C. CONTRACTOR will not discharge or in any other manner discriminate against any employee or applicant for employment because such employee or applicant has inquired about, discussed, or disclosed the compensation of the employee or applicant or another employee or applicant. This provision shall not apply to instances in which an employee who has access to the compensation information of other employees or applicants as a part of such employee's essential job functions discloses the compensation of such other employees or applicants to individuals who do not otherwise have access to such information, unless such disclosure is in response to a formal complaint or charge, in furtherance of an investigation, proceeding, hearing, or action, including an investigation conducted by the employer, or is consistent with the Contractor's legal duty to furnish information.

D. CONTRACTOR will send to each labor union or representative of workers with which he has a collective bargaining agreement or other contract or understanding, a notice to be provided advising the said labor union or workers' representatives of the contractor's commitments under this section, and shall post copies of the notice in conspicuous places available to employees and applicants for employment.

E. CONTRACTOR will comply with all provisions of Executive Order 11246 of September 24, 1965, and of the rules, regulations, and relevant orders of the Secretary of Labor.

F. In the event of CONTRACTOR’s noncompliance with the nondiscrimination clauses of this contract or with any of the said rules, regulations, or orders, this Contract may be canceled, terminated, or suspended in whole or in part and the CONTRACTOR may be declared ineligible for further federally funded contracts in accordance with procedures

SAMPLE

authorized in Executive Order 11246 of September 24, 1965, and such other sanctions may be imposed and remedies invoked as provided in Executive Order 11246 of September 24, 1965, or by rule, regulation, or order of the Secretary of Labor, or as otherwise provided by law.

G. CONTRACTOR will include the portion of the sentence immediately preceding paragraph (A) and the provisions of paragraphs (A) through (G) in every subcontract or purchase order unless exempted by rules, regulations, or orders of the Secretary of Labor issued pursuant to section 204 of Executive Order 11246 of September 24, 1965, so that such provisions will be binding upon each subcontractor or vendor. CONTRACTOR will take such action with respect to any subcontract or purchase order as the administering agency may direct as a means of enforcing such provisions, including sanctions for noncompliance:

Provided, however, that in the event CONTRACTOR becomes involved in, or is threatened with, litigation with a subcontractor or vendor as a result of such direction by the administering agency, the CONTRACTOR may request the United States to enter into such litigation to protect the interests of the United States.

5. CONTRACT WORK HOURS AND SAFETY STANDARDS ACT

A. Overtime requirements. Neither CONTRACTOR or subcontractor contracting for any part of the Contract work which may require or involve the employment of laborers or mechanics shall require or permit any such laborer or mechanic in any workweek in which he or she is employed on such work to work in excess of forty hours in such workweek unless such laborer or mechanic receives compensation at a rate not less than one and one-half times the basic rate of pay for all hours worked in excess of forty hours in such workweek.

B. Violation; liability for unpaid wages; liquidated damages. In the event of any violation of the clause set forth in paragraph (3)(A) of this section the CONTRACTOR and any subcontractor responsible therefor shall be liable for the unpaid wages. In addition, such CONTRACTOR and subcontractor shall be liable to the United States (in the case of work done under contract for the District of Columbia or a territory, to such District or to such territory), for liquidated damages. Such liquidated damages shall be computed with respect to each individual laborer or mechanic, including watchmen and guards, employed in violation of the clause set forth in paragraph (3)(A) of this section, in the sum of $27 for each calendar day on which such individual was required or permitted to work in excess of the standard workweek of forty hours without payment of the overtime wages required by the clause set forth in paragraph (3)(A) of this section.

C. Withholding for unpaid wages and liquidated damages. The CITY shall upon its own action or upon written request of an authorized representative of the Department of Labor withhold or cause to be withheld, from any moneys payable on account of work performed by the CONTRACTOR or subcontractor under any such contract or any other Federal

SAMPLE

contract with the same prime contractor, or any other federally-assisted contract subject to the Contract Work Hours and Safety Standards Act, which is held by the same prime contractor, such sums as may be determined to be necessary to satisfy any liabilities of such CONTRACTOR or sub-contractor for unpaid wages and liquidated damages as provided in the clause set forth in paragraph (3)(B) of this section.

D. Subcontracts. The Contractor or subcontractor shall insert in any subcontracts the clauses set forth in paragraph (3)(A) through (D) of this section and also a clause requiring the subcontractors to include these clauses in any lower tier subcontracts. The prime CONTRACTOR shall be responsible for compliance by any subcontractor or lower tier subcontractor with the clauses set forth in paragraphs (3)(A) through (D) of this section.

6. CLEAN AIR ACT

A. CONTRACTOR agrees to comply with all applicable standards, orders or regulations issued pursuant to the Clean Air Act, as amended, 42 U.S.C. § 7401 et seq.

B. CONTRACTOR agrees to report each violation to the CITY and understands and agrees that the CITY will, in turn, report each violation as required to assure notification to the Federal Emergency Management Agency, and the appropriate Environmental Protection Agency Regional Office.

CONTRACTOR agrees to include these requirements in each subcontract exceeding $150,000 financed in whole or in part with federal funds.

7. FEDERAL WATER POLLUTION CONTROL ACT

A. CONTRACTOR agrees to comply with all applicable standards, orders, or regulations issued pursuant to the Federal Water Pollution Control Act, as amended, 33 U.S.C. 1251 et seq.

B. CONTRACTOR agrees to report each violation to the CITY and understands and agrees that the CITY will, in turn, report each violation as required to assure notification to the appropriate federal agency.

C. CONTRACTOR agrees to include these requirements in each subcontract exceeding $150,000 financed in whole or in part with federal funding.

8. DEBARMENT AND SUSPENSION

A. This Contract is a Covered Transaction for purposes of 2 C.F.R. pt. 180 and 2 C.F.R. pt. 3000. As such, the CONTRACTOR is required to verify that none of the contractor's principals (defined at 2 C.F.R. § 180.995) or its affiliates (defined at 2 C.F.R. § 180.905) are excluded (defined at 2 C.F.R. § 180.940) or disqualified (defined at 2 C.F.R. § 180.935).

B. CONTRACTOR must comply with 2 C.F.R. pt. 180, subpart C and 2 C.F.R. pt. 3000, subpart C, and must include a requirement to comply with these regulations in any lower tier Covered Transaction it enters into.

SAMPLE

C. This certification is a material representation of fact relied upon by the CITY. If it is later determined that the CONTRACTOR did not comply with 2 C.F.R. pt. 180, subpart C and 2 C.F.R. pt. 3000, subpart C, in addition to remedies available to CITY, the Federal Government may pursue available remedies, including but not limited to suspension and/or debarment.

D. CONTRACTOR agrees to comply with the requirements of 2 C.F.R. pt. 180, subpart C and 2 C.F.R. pt. 3000, subpart C throughout the period of this Contract and to include a provision requiring such compliance in its lower tier covered transactions.

9. BYRD ANTI-LOBBYING AMENDMENT

A. Contractors who apply or bid for an award of $100,000 or more shall file the required certification with CITY. Each tier certifies to the tier above that it will not and has not used Federal appropriated funds to pay any person or organization for influencing or attempting to influence an officer or employee of any agency, a Member of Congress, officer or employee of Congress, or an employee of a Member of Congress in connection with obtaining any Federal contract, grant, or any other award covered by 31 U.S.C. § 1352. Each tier shall also disclose any lobbying with non-Federal funds that takes place in connection with obtaining any Federal award. Such disclosures are forwarded from tier to tier up to the recipient who in turn will forward the certification(s) to the CITY.

B. If applicable, CONTRACTOR must sign and submit to the CITY the certification required by Appendix A to 44 CFR Part 18 contained at Appendix A-1 to this Contract.

10. PROCUREMENT OF RECOVERED MATERIALS

A. In the performance of this Contract, CONTRACTOR shall make maximum use of products containing recovered materials that are EPA-designated items unless the product cannot be acquired:

   i. Competitively within a timeframe providing forcompliance with the contract performance schedule;

   ii. Meeting contract performance requirements; or

   iii. At a reasonable price.

B. Information about this requirement, along with the list of EPA- designated items, is available at EPA's Comprehensive Procurement Guidelines web site, https://www.epa.gov/smm/comprehensive- procurement-guideline-cpg-program.

C. CONTRACTOR also agrees to comply with all other applicable requirements of Section 6002 of the Solid Waste Disposal Act.

SAMPLE

APPENDIX A-1

APPENDIX A to 44 C.F.R. PART 18 – CERTIFICATION REGARDING LOBBYING
Certification for Contracts, Grants, Loans, and Cooperative Agreements

The undersigned certifies, to the best of his or her knowledge and belief, that:

1. No Federal appropriated funds have been paid or will be paid, by or on behalf of the undersigned, to any person for influencing or attempting to influence an officer or employee of an agency, a Member of Congress, an officer or employee of Congress, or an employee of a Member of Congress in connection with the awarding of any Federal contract, the making of any Federal grant, the making of any Federal loan, the entering into of any cooperative agreement, and the extension, continuation, renewal, amendment, or modification of any Federal contract, grant, loan, or cooperative agreement.

2. If any funds other than Federal appropriated funds have been paid or will be paid to any person for influencing or attempting to influence an officer or employee of any agency, a Member of Congress, an officer or employee of Congress, or an employee of a Member of Congress in connection with this Federal contract, grant, loan, or cooperative agreement, the undersigned shall complete and submit Standard Form-LLL, "Disclosure Form to Report Lobbying," in accordance with its instructions.

3. The undersigned shall require that the language of this certification be included in the award documents for all subawards at all tiers (including subcontracts, subgrants, and contracts under grants, loans, and cooperative agreements) and that all subrecipients shall certify and disclose accordingly.

This certification is a material representation of fact upon which reliance was placed when this transaction was made or entered into. Submission of this certification is a prerequisite for making or entering into this transaction imposed by section 1352, title 31, U.S. Code. Any person who fails to file the required certification shall be subject to a civil penalty of not less than $10,000 and not more than $100,000 for each such failure.

The Contractor, _____, certifies or affirms the truthfulness and accuracy of each statement of its certification and disclosure, if any. In addition, the Contractor understands and agrees that the provisions of 31 U.S.C. Chap.38, Administrative Remedies for
False Claims and Statements, apply to this certification and disclosure, if any.

SAMPLE

_____
Signature of Contractor's Authorized Official

_____
Name and Title of Contractor's Authorized Official

_____Date

APPENDIX B—Sub-recipient information and requirements

Pursuant to 2 CFR 200.332(a)(1) Federal Award Identification

(i) **Agency Name (must match the name associated with its unique entity identifier)**		(ii) **Unique Entity Identifier** *(i.e., DUNS)*	**City of Tacoma Number for This Agreement**
(iii) **Federal Award Identification Number (FAIN)**	(iv) **Federal Award Date**	(v) **Federal Period of Performance Start and End Date**	(vi) **Federal Budget Period Start and End Date**
(vii) **Amount of Federal Funds *Obligated* to the agency *by this action*:** $	(viii) **Total Amount of Federal Funds *Obligated* to the agency**	(ix) **Total Amount of the Federal Award *Committed* to the agency** $	
(x) **Federal Award Project Description:** CORONAVIRUS STATE AND LOCAL FISCAL RECOVERY FUNDS– City of Tacoma			
(xi) **Federal Awarding Agency:** DEPARTMENT OF THE TREASURY	**Pass-Through Entity:** City of Tacoma	**Awarding Official Name and Contact Information:**	
(xii) **Assistance Listing Number and Name (the pass-through entity must identify the dollar amount made available under each Federal award and the Assistance Listing number at time of disbursement)**			(xiii) **Identification of Whether the Award is R&D**
(xiv) **Indirect Cost Rate for the Federal Award**	**Award Payment Method (lump sum payment or reimbursement)** REIMBURSEMENT		

PAYMENT BOND
TO THE CITY OF TACOMA

[

Resolution No. [Enter Reso # Here]
Bond No.

That we, the undersigned, [Supplier name]
as principal, and _____
as a surety, are jointly and severally held and firmly bound to the CITY OF TACOMA, in the penal sum of,
$[dollar value], plus any applicable taxes , for the payment whereof Contractor and Surety bind themselves,
their executors, administrators, legal representatives, successors and assigns, jointly and severally, firmly by these presents.

This obligation is entered into in pursuance of the statutes of the State of Washington, the Ordinances of the City of Tacoma.

WHEREAS, under and pursuant to the City Charter and general ordinances of the City of Tacoma, the said City has or is about to enter with the above bounden principal, a contract, providing for

Specification No. [Enter Spec # Here]

Specification Title: [Enter Spec Title Here]

Contract No. [Enter Contract # Here]

(which contract is referenced to herein and is made a part hereof as though attached hereto), and

WHEREAS, the said principal has accepted, the said contract, and undertake to perform the work therein provided for in the manner and within the time set forth.

This statutory payment bond shall become null and void, if and when the Principal, its heirs, executors, administrators, successors, or assigns shall pay all persons in accordance with RCW 39.08, 39.12, and 60.28, including all workers, laborers, mechanics, subcontractors, and materialmen, and all person who shall supply such contractor or subcontractor with provisions and supplies for the carrying on of such work, and all taxes incurred on said Contract under Titles 50 and 51 RCW and all taxes imposed on the Principal under Title 82 RCW; and if such payment obligations have not been fulfilled, this bond shall remain in full force and effect.

The Surety for value received agrees that no change, extension of time, alteration or addition to the terms of the Contract shall in any way affect its obligation on this bond, and waivers notice of any changes, extension of time, alteration or addition to the terms of the Contract or the work performed. The Surety agrees that modifications and changes to the terms and conditions of the Contract that increase the total amount to be paid the Principal shall automatically increase the obligation of the Surety on this bond and notice to Surety is not required for such increased obligation.

No suit or action shall be commenced hereunder by any claimant unless claimant shall have given the written notices to the City, and where required, the Contractor, in accordance with RCW 39.08.030.

The amount of this bond shall be reduced by and to the extent of any payment or payments made in good faith hereunder, inclusive of the payment by Surety of claims which may be properly filed in accordance with RCW 39.08 whether or not suit is commenced under and against this bond.

If any claimant shall commence suit and obtain judgment against the Surety for recovery hereunder, then the Surety, in addition to such judgment and attorney fees as provided by RCW 39.08.030, shall also pay such costs and attorney fees as may be incurred by the City as a result of such suit. Venue for any action arising out of or in connection with this bond shall be in Pierce County, WA.

Surety companies executing bonds must be authorized to transact business in the State of Washington as surety and named in the current list of “Surety Companies Acceptable in Federal Bonds” as published in the Federal Register by the Audit Staff Bureau of Accounts, U.S. Department of the Treasury.

One original bond shall be executed, and be signed by the parties' duly authorized officers. This bond will only be accepted if it is accompanied by a fully executed power of attorney for the office executing on behalf of the surety.

Principal: [Supplier name]

_____

By: _____

Surety:

_____

By: _____

Agent's Name: _____

Agent's Address: _____

PERFORMANCE BOND
TO THE CITY OF TACOMA

Resolution No. [Enter Reso # Here]
Bond No.

That we, the undersigned, [Supplier Name]

as principal, and _____

as a surety, are jointly and severally held and firmly bound to the CITY OF TACOMA, in the penal sum of $[dollar value], plus any applicable tax , for the payment whereof Contractor and Surety bind themselves, their executors, administrators, legal representatives, successors and assigns, jointly and severally, firmly by these presents.

This obligation is entered into in pursuance of the statutes of the State of Washington, the Ordinances of the City of Tacoma.

WHEREAS, under and pursuant to the City Charter and general ordinances of the City of Tacoma, the said City has or is about to enter with the above bounden principal, a contract, providing for

Specification No. [Enter Spec # Here]

Specification Title: [Enter Spec Title Here]

Contract No. [Enter Contract # Here]

(which contract is referenced to herein and is made a part hereof as though attached hereto), and

WHEREAS, the said principal has accepted, the said contract, and undertake to perform the work therein provided for in the manner and within the time set forth.

This statutory performance bond shall become null and void, if and when the principal, its heirs, executors, administrators, successors, or assigns shall well and faithfully perform all of the Principal's obligations under the Contract and fulfill all terms and conditions of all duly authorized modifications, additions and changes to said Contract that may hereafter be made, at the time and in the manner therein specified; and if such performance obligations have not been fulfilled, this bond shall remain in force and effect.

The Surety for value received agrees that no change, extension of time, alteration or addition to the terms of the Contract, the specifications accompanying the Contract, or to the work to be performed under the Contract shall in any way affect its obligation on this bond, and waives notice of any change, extension of time, alteration or addition to the terms of the Contract or the work performed. The Surety agrees that modifications and changes to the terms and conditions of the Contract that increase the total amount to be paid the Principal shall automatically increase the obligation of the Surety on this bond and notice to Surety is not required for such increase.

If the City shall commence suit and obtain judgment against the Surety for recovery hereunder, then the Surety, in addition to such judgement, shall pay all costs and attorney's fees incurred by the City in enforcement of its rights hereunder. Venue for any action arising out of in in connection with this bond shall be in Pierce County, Washington.

Surety companies executing bonds must be authorized to transact business in the State of Washington as surety and named in the current list of "Surety Companies Acceptable in Federal Bonds" as published in the Federal Register by the Audit Staff Bureau of Accounts, U.S. Department of the Treasury.

One original bond shall be executed, and signed by the parties' duly authorized officers. This bond will only be accepted if it is accompanied by a fully executed power of attorney for the office executing on behalf of the surety.

Principal: [Supplier name]

_____

By: _____

Surety:

_____

By: _____

Agent's Name: _____

Agent's Address: _____

GENERAL RELEASE TO THE CITY OF TACOMA

The undersigned, named as the contractor for _____
Project / Spec. #
between _____ and the City of Tacoma,
(Themselves or Itself)
dated _____, 20___, hereby releases the City of Tacoma, its departmental officers and agents from any and all claim or claims whatsoever in any manner whatsoever at any time whatsoever arising out of and/or in connection with and/or relating to said contract, excepting only the equity of the undersigned in the amount now retained by the City of Tacoma under said contract, to-wit the sum of $_____.

Signed at Tacoma, Washington this _____ day of _____, 20___.

_____
Contractor

By _____

Title _____

PART II

SPECIAL PROVISIONS

TABLE OF CONTENTS

INTRODUCTION
(******)

The following special provisions shall be used in conjunction with the "**2023 Standard Specifications for Road, Bridge and Municipal Construction**" and "**Standard Plans for Road, Bridge, and Municipal Construction**" as prepared by the Washington State Department of Transportation (WSDOT). The Standard Specifications, as modified or supplemented by the Amendments to the Standard Specifications and these Special Provisions, all of which are made a part of the Contract Documents, shall govern all of the Work. State Standard Specifications are available through WSDOT, by calling (360) 705-7430, emailing engrpubs@wsdot.wa.gov, or may be downloaded, free of charge, from this location on the WSDOT home page:
http://www.wsdot.wa.gov/Publications/Manuals/M41-10.htm

These Special Provisions are made up of both General Special Provisions (GSPs) from various sources, which may have project-specific fill-ins; and project-specific Special Provisions. Each Provision either supplements, modifies, or replaces the comparable Standard Specification, or is a new Provision. The deletion, amendment, alteration, or addition to any subsection or portion of the Standard Specifications is meant to pertain only to that particular portion of the section, and in no way should it be interpreted that the balance of the section does not apply.

The GSPs are labeled under the headers of each GSP, with the date of the GSP and its source, as follows:

(May 18, 2007 APWA GSP)
(August 7, 2006 WSDOT GSP)
(April 2, 2007 Tacoma GSP)

The project specific Special Provisions are labeled under the headers of each Special Provision as follows:

(******)

Also incorporated into the Contract Documents by reference are:

1. *Manual on Uniform Traffic Control Devices for Streets and Highways*, currently adopted edition, with Washington State modifications, if any
2. *Standard Plans for Road, Bridge and Municipal Construction*, WSDOT/APWA, current edition
3. City of Tacoma Standard Plans
4. City of Tacoma Traffic Control Handbook
5. City of Tacoma Right-of-Way Restoration Manual

Contractor shall obtain copies of these publications, at Contractor's own expense.

A pre-bid conference will not be held.

DESCRIPTION OF WORK
(******)

This Contract shall generally consist of the installation of electrical duct banks and electrical utility vaults, construction of new roadway sections, asphalt grind and overlay, sidewalk replacement, concrete driveway installation, curb/gutter replacement, site restoration, and other work, all in accordance with the attached Contract Plans, these Contract Provisions, and the Standard Specifications.

END OF SECTION

1-01 DEFINITIONS AND TERMS

1-01.3 Definitions
(January 19, 2022 APWA GSP)

Delete the heading **Completion Dates** and the three paragraphs that follow it, and replace them with the following:

Dates

Bid Opening Date
The date on which the Contracting Agency publicly opens and reads the Bids.

Award Date
The date of the formal decision of the Contracting Agency to accept the lowest responsible and responsive Bidder for the Work.

Contract Execution Date
The date the Contracting Agency officially binds the Agency to the Contract.

Notice to Proceed Date
The date stated in the Notice to Proceed on which the Contract time begins.

Substantial Completion Date
The day the Engineer determines the Contracting Agency has full and unrestricted use and benefit of the facilities, both from the operational and safety standpoint, any remaining traffic disruptions will be rare and brief, and only minor incidental work, replacement of temporary substitute facilities, plant establishment periods, or correction or repair remains for the Physical Completion of the total Contract.

Physical Completion Date
The day all of the Work is physically completed on the project. All documentation required by the Contract and required by law does not necessarily need to be furnished by the Contractor by this date.

Completion Date
The day all the Work specified in the Contract is completed and all the obligations of the Contractor under the contract are fulfilled by the Contractor. All documentation required by the Contract and required by law must be furnished by the Contractor before establishment of this date.

Final Acceptance Date
The date on which the Contracting Agency accepts the Work as complete.

Supplement this Section with the following:

All references in the Standard Specifications or WSDOT General Special Provisions, to the terms “Department of Transportation”, “Washington State Transportation Commission”, “Commission”, “Secretary of Transportation”, “Secretary”, “Headquarters”, and “State Treasurer” shall be revised to read “Contracting Agency”.

All references to the terms “State” or “state” shall be revised to read “Contracting Agency” unless the reference is to an administrative agency of the State of Washington, a State statute or regulation, or the context reasonably indicates otherwise.

All references to “State Materials Laboratory” shall be revised to read “Contracting Agency designated location”.

All references to “final contract voucher certification” shall be interpreted to mean the Contracting Agency form(s) by which final payment is authorized, and final completion and acceptance granted.

Additive
A supplemental unit of work or group of bid items, identified separately in the Bid Proposal, which may, at the discretion of the Contracting Agency, be awarded in addition to the base bid.

Alternate
One of two or more units of work or groups of bid items, identified separately in the Bid Proposal, from which the Contracting Agency may make a choice between different methods or material of construction for performing the same work.

Business Day
A business day is any day from Monday through Friday except holidays as listed in Section 1-08.5.

Contract Bond
The definition in the Standard Specifications for “Contract Bond” applies to whatever bond form(s) are required by the Contract Documents, which may be a combination of a Payment Bond and a Performance Bond.

Contract Documents
See definition for “Contract”.

Contract Time
The period of time established by the terms and conditions of the Contract within which the Work must be physically completed.

Notice of Award
The written notice from the Contracting Agency to the successful Bidder signifying the Contracting Agency’s acceptance of the Bid Proposal.

Notice to Proceed
The written notice from the Contracting Agency or Engineer to the Contractor authorizing and directing the Contractor to proceed with the Work and establishing the date on which the Contract time begins.

Traffic
Both vehicular and non-vehicular traffic, such as pedestrians, bicyclists, wheelchairs, and equestrian traffic.

This section is supplemented with the following:
(April 15, 2020 Tacoma GSP)

All references to the acronym “UDBE” shall be revised to read “DBE/EIC”.

All references in the Standard Specifications to the term “Proposal Bond” shall be revised to read “Bid Bond.”

Base Bid
The summation of Bid Item amounts (extensions) in the Bid Forms, excluding Additives, Alternates, Deductives, Force Accounts, and taxes collected separately pursuant to Section 1-07.2.

Calendar Day
The time period of 24 hours measured from midnight to the next midnight, including weekends and holidays.

Change Order
A written order to the Contractor, issued by the Contracting Agency after execution of the contract, authorizing an addition, deletion, or other revision in the Work, within the scope of the Contract Documents, and establishing the basis of payment and time adjustments, if any, for the Work affected by the change.

Day
Unless otherwise specified, a calendar day.

Deductive
A supplemental unit of work or group of Bid Items, identified separately in the Bid, which may, at the discretion of the Contract Agency, be deducted from the Base Bid should the Contract Agency choose not to Award the total Base Bid.

Grand Total Price
The Grand Total Price of the Contract will include the Base Bid, Additives, Alternates, Deductives, Force Accounts, and taxes collected separately pursuant to Section 1-07.2.

Standard Specifications
Divisions One through Nine of the specified edition of the WSDOT “Standard Specifications for Road, Bridge, and Municipal Construction.”

END OF SECTION

1-02 BID PROCEDURES AND CONDITIONS

1-02.1 Prequalification of Bidders

Delete this section and replace it with the following:

1-02.1 Qualifications of Bidder
(January 24, 2011 APWA GSP)

Before award of a public works contract, a bidder must meet at least the minimum qualifications of RCW 39.04.350(1) to be considered a responsible bidder and qualified to be awarded a public works project.

1-02.2 Plans and Specifications
(June 27, 2011 APWA GSP)

Delete this section and replace it with the following:

Information as to where Bid Documents can be obtained or reviewed can be found in the Call for Bids (Advertisement for Bids) for the work.

After award of the contract, plans and specifications will be issued to the Contractor at no cost as detailed below:

To Prime Contractor	No. of Sets	Basis of Distribution
Reduced plans (11" x 17")	6	Furnished automatically upon award.
Contract Provisions	6	Furnished automatically upon award.
Large plans (e.g., 22" x 34")	2	Furnished only upon request.

Additional plans and Contract Provisions may be obtained by the Contractor from the source stated in the Call for Bids, at the Contractor's own expense.

1-02.4(1) General
(December 30, 2022 APWA GSP Option B)

The first sentence of the ninth paragraph, beginning with "Prospective Bidder desiring…", is revised to read:

> Prospective Bidders desiring an explanation or interpretation of the Bid Documents, shall request the explanation or interpretation in writing by close of business 6 business days preceding the bid opening to allow a written reply to reach all prospective Bidders before the submission of their Bids.

1-02.5 Proposal Forms
(July 31, 2017 APWA GSP)
Delete this section and replace it with the following:

The Proposal Form will identify the project and its location and describe the work. It will also list estimated quantities, units of measurement, the items of work, and the materials to be furnished at the unit bid prices. The bidder shall complete spaces on the proposal form that call for, but are not limited to, unit prices; extensions; summations; the total bid amount; signatures; date; and, where applicable, retail sales taxes and acknowledgment of addenda; the bidder's name, address, telephone number, and signature; the bidder's UDBE/DBE/M/WBE commitment, if applicable; a State of Washington Contractor's Registration Number; and a Business License Number, if applicable. Bids shall be completed by typing or shall be printed in ink by hand, preferably in black ink. The required certifications are included as part of the Proposal Form.

The Contracting Agency reserves the right to arrange the proposal forms with alternates and additives, if such be to the advantage of the Contracting Agency. The bidder shall bid on all alternates and additives set forth in the Proposal Form unless otherwise specified.

1-02.6 Preparation of Proposal
(December 10, 2020 APWA GSP, Option B)

Supplement the second paragraph with the following:

4. If a minimum bid amount has been established for any item, the unit or lump sum price must equal or exceed the minimum amount stated.

5. Any correction to a bid made by interlineation, alteration, or erasure, shall be initialed by the signer of the bid.

Delete the last two paragraphs, and replace them with the following:

The Bidder shall submit with their Bid a completed Contractor Certification Wage Law Compliance form, provided by the Contracting Agency. Failure to return this certification as part of the Bid Proposal package will make this Bid Nonresponsive and ineligible for Award. A Contractor Certification of Wage Law Compliance form is included in the Proposal Forms.

The Bidder shall make no stipulation on the Bid Form, nor qualify the bid in any manner.

A bid by a corporation shall be executed in the corporate name, by the president or a vice president (or other corporate officer accompanied by evidence of authority to sign).

A bid by a partnership shall be executed in the partnership name, and signed by a partner. A copy of the partnership agreement shall be submitted with the Bid Form if any UDBE requirements are to be satisfied through such an agreement.

A bid by a joint venture shall be executed in the joint venture name and signed by a member of the joint venture. A copy of the joint venture agreement shall be

submitted with the Bid Form if any UDBE requirements are to be satisfied through such an agreement.

The fourth paragraph is revised to read:
(October 18, 2013 Tacoma GSP)

The bidder shall submit the following completed forms:
City of Tacoma – Equity in Contracting Utilization Form

Add the following new section:

1-02.6(1) Recycled Materials Proposal
(January 4, 2016 APWA GSP)

The Bidder shall submit with the Bid, its proposal for incorporating recycled materials into the project, using the form provided in the Contract Provisions.

1-02.7 Bid Deposit
(March 1, 2021 Tacoma GSP)
Delete this section and replace it with the following:

A deposit of at least 5 percent of the total Bid shall accompany each Bid. This deposit may be cash, certified check, cashier's check, or a proposal bond (Surety bond). Any proposal bond shall be on the Contracting Agency's form and shall be signed by the Bidder and the Surety. A proposal bond shall not be conditioned in any way to modify the minimum 5 percent required. The Surety shall: (1) be registered with the Washington State Insurance Commissioner, and (2) appear on the current Authorized Insurance List in the State of Washington published by the Office of the Insurance Commissioner.

The failure to furnish a Bid deposit of a minimum of 5 percent shall make the Bid nonresponsive and shall cause the Bid to be rejected by the Contracting Agency.

If submitting your bid electronically, a scanned version of the original bid bond or cashier's check shall accompany your electronic bid submittal. The original bid bond or cashier's check shall be sent to the Contracting Agency and received by the Contracting Agency within 7 calendar days of the bid opening or the bidder may be deemed non-responsive.

Original bid bonds or cashier's check will be delivered to:

Tacoma Public Utilities Administration Building North,
Main Floor, Lobby Security Desk
3628 South 35th Street
Tacoma, WA 98409
Monday – Friday 8:00 am to 4:30 pm

If so stated in the Contract Provisions, cash will not be accepted for a bid deposit.

1-02.9 Delivery of Proposal
(******)
Delete this section and replace it with the following:

Each Proposal shall be submitted in a sealed envelope or shall be submitted electronically via email to sendbid@cityoftacoma.org, with the Project Name and Project Number as stated in the Call for Bids clearly marked on the outside of the envelope, or as otherwise required in the Bid Documents, to ensure proper handling and delivery.

The Bidder shall submit to the Contracting Agency a signed "Certification of Compliance with Wage Payment Statutes" document where the Bidder under penalty of perjury verifies that the Bidder is in compliance with responsible bidder criteria in RCW 39.04.350 subsection (1) (g), as required per Section 1-02.14. The "Certification of Compliance with Wage Payment Statutes" document shall be received with the Bid Proposal**.**

1-02.10 Withdrawing, Revising, or Supplementing Proposal
(******)

Delete this section and replace it with the following:

After submitting a Bid Proposal to the Contracting Agency, the Bidder may withdraw, revise, or supplement it if:

1. The Bidder submits a written request signed by an authorized person and emails it to sendbid@cityoftacoma.org, and
2. The Contracting Agency receives the request before the time set for receipt of Proposals, and
3. The revised or supplemented Bid Proposal (if any) is received by the Contracting Agency before the time set for receipt of Bid Proposals.

The Bidder's written request to revise or supplement a Bid Proposal must be accompanied by the revised or supplemented package in its entirety. If the Bidder does not submit a revised or supplemented package, then its bid shall be considered withdrawn.

Late revised or supplemented Bid Proposals or late withdrawal requests will be date recorded by the Contracting Agency and returned unopened.

1-02.12 Public Opening of Proposals
(******)

Delete this section and replace it with the following:

Proposals will be opened and publicly read via webcast at the time indicated in the call for Bids unless the Bid opening has been delayed or canceled.

This public bid opening will be held via webinar. Please use the link below or on the Request for Bids page to join the webinar:

https://us06web.zoom.us/j/88402680573?pwd=eThSaXZxNER0TWRhUGx6U0F2cURMZz09

Preliminary and final bid results are posted at www.TacomaPurchasing.org.

1-02.13 Irregular Proposals
(October 18, 2013 Tacoma GSP)
Delete this section and replace it with the following:

1. A proposal will be considered irregular and will be rejected if:
   a. The Bidder is not prequalified when so required;
   b. The authorized proposal form furnished by the Contracting Agency is not used or is altered;
   c. The completed proposal form contains any unauthorized additions, deletions, alternate Bids, or conditions;
   d. The Bidder adds provisions reserving the right to reject or accept the award, or enter into the Contract;
   e. A price per unit cannot be determined from the Bid Proposal;
   f. The Proposal form is not properly executed;
   g. The Bidder fails to submit or properly complete a Subcontractor list, if applicable, as required in Section 1-02.6;
   h. The bidder fails to submit or properly complete the EIC forms as required in Section 1-02.6;
   i. The Bid Proposal does not constitute a definite and unqualified offer to meet the material terms of the Bid invitation; or
   j. More than one proposal is submitted for the same project from a Bidder under the same or different names.
2. A Proposal may be considered irregular and may be reject if:
   a. The Proposal does not include a unit price for every Bid item;
   b. Any of the unit prices are excessively unbalanced (either above or below the amount of a reasonable Bid) to the potential detriment of the Contracting Agency;
   c. Receipt of Addenda is not acknowledged;
   d. A member of a joint venture or partnership and the joint venture or partnership submit Proposals for the same project (in such an instance, both Bids may be rejected); or
   e. If Proposal form entries are not made in ink.

1-02.14 Disqualification of Bidders
(October 18, 2013 Tacoma GSP)
Delete this section and replace it with the following:

A Bidder will be deemed not responsible if:

1. the Bidder does not meet the mandatory bidder responsibility criteria in RCW 39.04.350(1), as amended; or
2. evidence of collusion exists with any other Bidder or potential Bidder. Participants in collusion will be restricted from submitting further bids; or
3. the Bidder, in the opinion of the Contracting Agency, is not qualified for the work or to the full extent of the bid, or to the extent that the bid exceeds the authorized prequalification amount as may have been determined by a prequalification of the Bidder; or
4. an unsatisfactory performance record exists based on past or current Contracting Agency work or for work done for others, as judged from the

standpoint of conduct of the work; workmanship; or progress; affirmative action; equal employment opportunity practices; termination for cause; or Disadvantaged Business Enterprise, Minority Business Enterprise, or Women's Business Enterprise utilization; or

5. there is uncompleted work (Contracting Agency or otherwise) which in the opinion of the Contracting Agency might hinder or prevent the prompt completion of the work bid upon; or
6. the Bidder failed to settle bills for labor or materials on past or current contracts, unless there are extenuating circumstances acceptable to the Contracting Agency; or
7. the Bidder has failed to complete a written public contract or has been convicted of a crime arising from a previous public contract, unless there are extenuating circumstances acceptable to the Contracting Agency; or
8. the Bidder is unable, financially or otherwise, to perform the work, in the opinion of the Contracting Agency; or
9. there are any other reasons deemed proper by the Contracting Agency; or
10. the Bidder fails to meet the Project-specific supplemental bidder responsibility criteria listed in the **Notice to All Bidders**, 1-02.1 or
11. The bidder fails to meet the EIC requirements as described in Section 1-02.6.

As evidence that the Bidder meets the bidder responsibility criteria above, the apparent two lowest Bidders must submit to the Contracting Agency within 24 hours of the bid submittal deadline, documentation (sufficient in the sole judgment of the Contracting Agency) demonstrating compliance with all applicable responsibility criteria, including all documentation specifically listed in the supplemental criteria. The Contracting Agency reserves the right to request such documentation from other Bidders as well, and to request further documentation as needed to assess bidder responsibility.

The basis for evaluation of Bidder compliance with these supplemental criteria shall be any documents or facts obtained by Contracting Agency (whether from the Bidder or third parties) which any reasonable owner would rely on for determining such compliance, including but not limited to: (i) financial, historical, or operational data from the Bidder; (ii) information obtained directly by the Contracting Agency from owners for whom the Bidder has worked, or other public agencies or private enterprises; and (iii) any additional information obtained by the Contracting Agency which is believed to be relevant to the matter.

If the Contracting Agency determines the Bidder does not meet the bidder responsibility criteria above and is therefore not a responsible Bidder, the Contracting Agency shall notify the Bidder in writing, with the reasons for its determination. If the Bidder disagrees with this determination, it may appeal the determination within 24 hours of receipt of the Contracting Agency's determination by presenting its appeal to the Contracting Agency. The Contracting Agency will consider the appeal before issuing its final determination. If the final determination affirms that the Bidder is not responsible, the Contracting Agency will not execute a contract with any other Bidder until at least two business days after the Bidder determined to be not responsible has received the final determination.

1-02.15 Pre Award Information
(December 30, 2022 APWA GSP)

Revise this section to read:

Before awarding any contract, the Contracting Agency may require one or more of these items or actions of the apparent lowest responsible bidder:

1. A complete statement of the origin, composition, and manufacture of any or all materials to be used,
2. Samples of these materials for quality and fitness tests,
3. A progress schedule (in a form the Contracting Agency requires) showing the order of and time required for the various phases of the work,
4. A breakdown of costs assigned to any bid item,
5. Attendance at a conference with the Engineer or representatives of the Engineer,
6. Obtain, and furnish a copy of, a business license to do business in the city or county where the work is located.
7. Any other information or action taken that is deemed necessary to ensure that the bidder is the lowest responsible bidder.

END OF SECTION

1-03 AWARD AND EXECUTION OF CONTRACT

1-03.1 Consideration of Bids
(December 30, 2022 APWA GSP)
Revise the first paragraph to read:

After opening and reading proposals, the Contracting Agency will check them for correctness of extensions of the prices per unit and the total price. If a discrepancy exists between the price per unit and the extended amount of any bid item, the price per unit will control. If a minimum bid amount has been established for any item and the bidder's unit or lump sum price is less than the minimum specified amount, the Contracting Agency will unilaterally revise the unit or lump sum price, to the minimum specified amount and recalculate the extension. The total of extensions, corrected where necessary, including sales taxes where applicable and such additives and/or alternates as selected by the Contracting Agency, will be used by the Contracting Agency for award purposes and to fix the Awarded Contract Price amount and the amount of the contract bond.

1-03.1(1) Identical Bid Totals
(December 30, 2022 APWA GSP)
Revise this section to read:

After opening Bids, if two or more lowest responsive Bid totals are exactly equal, then the tie-breaker will be the Bidder with an equal lowest bid, that proposed to use the highest percentage of recycled materials in the Project, per the form submitted with the Bid Proposal. If those percentages are also exactly equal, then the tie-breaker will be determined by drawing as follows: Two or more slips of paper will be marked as follows: one marked "Winner" and the other(s) marked "unsuccessful". The slips will be folded to make the marking unseen. The slips will be placed inside a box. One authorized representative of each Bidder shall draw a slip from the box. Bidders shall draw in alphabetic order by the name of the firm as registered with the Washington State Department of Licensing. The slips shall be unfolded and the firm with the slip marked "Winner" will be determined to be the successful Bidder and eligible for Award of the Contract. Only those Bidders who submitted a Bid total that is exactly equal to the lowest responsive Bid, and with a proposed recycled materials percentage that is exactly equal to the highest proposed recycled materials amount, are eligible to draw.

1-03.2 Award of Contract
(March 27, 2003 Tacoma GSP)
This section is supplemented with the following:

All references to 45 calendar days shall be revised to read 60 calendar days.

1-03.3 Execution of Contract
(January 19, 2022 APWA GSP)

Revise this section to read:

Within 3 calendar days of Award date (not including Saturdays, Sundays and Holidays), the successful Bidder shall provide the information necessary to execute the Contract to the Contracting Agency. The Bidder shall send the contact information, including the full

name, email address, and phone number, for the authorized signer and bonding agent to the Contracting Agency.

Copies of the Contract Provisions, including the unsigned Form of Contract, will be available for signature by the successful bidder on the first business day following award. The number of copies to be executed by the Contractor will be determined by the Contracting Agency.

Within 10 calendar days after the award date, the successful bidder shall return the signed Contracting Agency-prepared contract, an insurance certification as required by Section 1-07.18, a satisfactory bond as required by law and Section 1-03.4, the Transfer of Coverage form for the Construction Stormwater General Permit with sections I, III, and VIII completed when provided. Before execution of the contract by the Contracting Agency, the successful bidder shall provide any pre-award information the Contracting Agency may require under Section 1-02.15.

Until the Contracting Agency executes a contract, no proposal shall bind the Contracting Agency nor shall any work begin within the project limits or within Contracting Agency-furnished sites. The Contractor shall bear all risks for any work begun outside such areas and for any materials ordered before the contract is executed by the Contracting Agency.

If the bidder experiences circumstances beyond their control that prevents return of the contract documents within the calendar days after the award date stated above, the Contracting Agency may grant up to a maximum of 10 additional calendar days for return of the documents, provided the Contracting Agency deems the circumstances warrant it.

1-03.4 Contract Bond
(July 23, 2015 APWA GSP)
Delete the first paragraph and replace it with the following:

The successful bidder shall provide executed payment and performance bond(s) for the full contract amount. The bond may be a combined payment and performance bond; or be separate payment and performance bonds. In the case of separate payment and performance bonds, each shall be for the full contract amount. The bond(s) shall:

1. Be on Contracting Agency-furnished form(s);
2. Be signed by an approved surety (or sureties) that:
    a. Is registered with the Washington State Insurance Commissioner, and
    b. Appears on the current Authorized Insurance List in the State of Washington published by the Office of the Insurance Commissioner,
3. Guarantee that the Contractor will perform and comply with all obligations, duties, and conditions under the Contract, including but not limited to the duty and obligation to indemnify, defend, and protect the Contracting Agency against all losses and claims related directly or indirectly from any failure:
    a. Of the Contractor (or any of the employees, subcontractors, or lower tier subcontractors of the Contractor) to faithfully perform and comply with all contract obligations, conditions, and duties, or
    b. Of the Contractor (or the subcontractors or lower tier subcontractors of the Contractor) to pay all laborers, mechanics, subcontractors, lower tier

subcontractors, material person, or any other person who provides supplies or provisions for carrying out the work;

4. Be conditioned upon the payment of taxes, increases, and penalties incurred on the project under titles 50, 51, and 82 RCW; and
5. Be accompanied by a power of attorney for the Surety's officer empowered to sign the bond; and
6. Be signed by an officer of the Contractor empowered to sign official statements (sole proprietor or partner). If the Contractor is a corporation, the bond(s) must be signed by the president or vice president, unless accompanied by written proof of the authority of the individual signing the bond(s) to bind the corporation (i.e., corporate resolution, power of attorney, or a letter to such effect signed by the president or vice president).

1-03.5 Failure to Execute Contract
(April 15, 2020 Tacoma GSP)
The first sentence is revised to read:

Failure to return the insurance certification and bond with the signed contract as required in Section 1-03.3, or failure to provide Equity In Contracting (EIC) information if required in the contract, or failure or refusal to sign the Contract, or failure to register as a contractor in the state of Washington shall result in forfeiture of the bid bond or deposit of this Bidder

END OF SECTION

1-04 SCOPE OF THE WORK

1-04.2 Coordination of Contract Documents, Plans, Special Provisions, Specifications, and Addenda
(December 30, 2022 APWA GSP)

Revise the second paragraph to read:

Any inconsistency in the parts of the contract shall be resolved by following this order of precedence (e.g., 1 presiding over 2, 2 over 3, 3 over 4, and so forth):

1. Addenda,
2. Proposal Form,
3. Special Provisions,
4. Contract Plans,
5. Standard Specifications,
6. Contracting Agency's Standard Plans or Details (if any), and
7. WSDOT Standard Plans for Road, Bridge, and Municipal Construction

1-04.4 Changes
(January 19, 2022 APWA GSP)

The first two sentences of the last paragraph of Section 1-04.4 are deleted.

1-04.6 Variation in Estimated Quantities
(December 30, 2022 APWA GSP, Option B)

Revise the first paragraph to read:

Payment to the Contractor will be made only for the actual quantities of Work performed and accepted in conformance with the Contract. When the accepted quantity of Work performed under a unit item varies from the original Proposal quantity, payment will be at the unit Contract price for all Work unless the total accepted quantity of the Contract item, adjusted to exclude added or deleted amounts included in change orders accepted by both parties, increases or decreases by more than 25 percent from the original Proposal quantity, and if the total extended bid price for that item at time of award is equal to or greater than 10 percent of the total contract price at time of award. In that case, payment for contract work may be adjusted as described herein:

END OF SECTION

1-05 CONTROL OF WORK

1-05.3 Working Drawings
(January 13, 2011 Tacoma GSP)
This section is deleted in its entirety and replaced with the following:

1-05.3 Submittals

The Contractor shall not install materials or equipment, which require submittals, until reviewed by the Contracting Agency.

The Contractor shall submit four (4) copies to the Engineer of all submittals required by the Contract Documents, unless otherwise required in these Special Provisions. This includes, but is not limited to:

- Shop Drawings/Plans
- Product Data
- Samples
- Reports
- Material Submittals (Ref. 1-06)
- Progress Schedules (Ref. 1-08.3)
- Guarantees/Warranties (Ref. 1-05.10)

The Engineer will return one (1) copy to the Contractor.

1-05.3(1) Submittal Schedule

In conformance with section 1-08.3, the progress schedule shall be submitted and reviewed prior to commencing any work.

No claim will be allowed for damages or extension of time resulting from rejection of a submittal or the requirement of resubmittals as outlined by this section.

The Engineer's review will be completed as quickly as possible, but may require up to ten (10) working days from the date the submittals or resubmittals are received until they are sent to the Contractor. If more than ten (10) working days are required for the Engineer's review of any individual submittal or resubmittal, an extension of time will be considered in accordance with Section 1-08.8.

1-05.3(2) Submittal Procedures

Contractor submittals shall be in accordance with the following:

The Contractor shall thoroughly review each submittal for dimensions, quantities, and details of the material or item shown. The Contractor shall review each submittal and note any errors, omissions, or deviations with the Contract Documents. The Contractor shall accept full responsibility for the completeness of each submittal.

Each submittal shall have a unique number assigned to it, and the transmittals shall be sequentially numbered. The numbering of resubmittals shall meet the requirements of

Section 1-05.3(4). On each page, indicate the page number, and total number of pages in each submittal.

Each submittal shall indicate the intended use of the item in the work. When catalog pages are submitted, applicable items shall be clearly identified. The current revision, issue number, and data shall be indicated on all drawings and other descriptive data.

Each submittal should be transmitted with the "Submittal Transmittal Form" found at the end of this section. Upon request, an electronic copy of the Submittal Transmittal Form will be made available to the Contractor.

In lieu of utilizing the Submittal Transmittal Form, the Contractor may display the following information on each submittal, in a clear space on the front of the submittal:

- Project Name: TPU S 17th St Court D/E
- Project Specification Number: PW23-0090F
- Project No. PWR-01216-09
- Submittal Date
- Description of Submittal
- Sequential, unique submittal number.
- Related Specification Section and/or plan sheet
- The following statement: "This document has been detail-checked for accuracy of content and for compliance with the Contract documents. The information contained herein has been fully coordinated with all involved Subcontractors."
- Printed or typed name and signature of Contractor.

When submitting product data, the Contractor shall modify drawings to delete any information not applicable to the project and add information that is applicable to the project. The Contractor shall mark copies of printed material to clearly identify the pertinent materials, products or models.

Samples submitted shall be of sufficient size and quantity to clearly illustrate functional characteristics of product or material and full range of colors available. Field samples and mock-ups, where required, shall be erected at the project site where directed by the Engineer.

The Contractor shall notify the Engineer, in writing at time of submission, of deviations in submittals from requirements of the Contract documents.

The City shall not be responsible for delays in reviewing submittals not submitted in accordance with these specifications.

1-05.3(3) Engineer's Review of Submittals

The Engineer's review of drawings and data submitted by the Contractor will cover only general conformity with the Contract drawings and specifications. The Engineer's review of submittals shall not relieve the Contractor from responsibility for errors, omissions, deviations, or responsibility for compliance with the Contract documents.
Review of a separate item does not constitute review of an assembly in which the item functions.

When the submittal or resubmittal is marked “REVIEWED”, or “REVIEWED WITH COMMENTS”, no additional copies need to be furnished. The Contractor shall comply with any comments on the return submittal.

1-05.3(4) Resubmittals

When a submittal is marked “AMEND AND RESUBMIT” or “REJECTED, SEE REMARKS,” the Contractor shall make the corrections as noted and instructed by the Engineer and resubmit four (4) copies. The Contractor shall not install material or equipment that has received a review status of “AMEND AND RESUBMIT” or REJECTED, SEE REMARKS”.

When corrected copies are resubmitted, the Contractor shall in writing direct specific attention to all revisions and shall list separately any revision made other than those called for by the Engineer on previous submittals. Resubmittals shall bear the number of the original submittal followed by a letter (A, B, etc.) to indicate the sequence of the resubmittal.

The Contractor shall revise returned submittals as required and resubmit until final review is obtained.

The Contractor shall verify that all exceptions previously noted by the Engineer have been accounted for.

1-05.3(5) Submittal Requirements by Section

The following is a summary of submittal requirements. This summary is not inclusive of all submittal requirements. The Contractor shall review each individual section in the applicable provisions or specifications, as noted below, for specific requirements.

Section	Description
1-05.3(6)	Project Red Line Drawings
1-06.1	Proposed Material Sources
1-06.1(2)	Request for Approval of Material
1-06.3	Manufacturer's Certificate of Compliance
1-07.15	Temporary Water Pollution/Erosion Control Plan
1-07.15(1)	Spill Prevention, Control and Countermeasures (SPCC) Plan
1-07.16(1)	Property Owner Notification
1-08.3(2)	Progress Schedule
1-09.6	Equipment Rental Rates and Equipment Watch Sheets
1-09.9	Schedule Of Values
1-10.2	Traffic Control Plan
1-10.3(3)L	Business Open Signs
2-07.3(1)	Hydrant Permit
2-09.3(4)	Engineered Shoring Design for Depths Over 20 Feet
4-04	Crushed Surfacing Top Course
4-04	Crushed Surfacing Base Course
5-04	Asphalt Mix Design Certification
5-05	Concrete Mix Design
7-05	Manholes
7-05	Castings
7-08.3(1)A	Dewatering Plan
7-08.3(1)A	Special Approved Discharge (SAD) Permit for Sanitary
7-08.3(1)C	Pipe Bedding
7-08.3(3)	Trench Backfill
7-08.3(6)	CDF Mix Design
7-17	Pipe materials
8-01.3(1)A	Stormwater Pollution Prevention Plan (SWPPP)
8-02	Plant Selection
8-13	Monuments
8-22	Pavement Markings
8-40	Power Utility Vault Shop Drawings

1-05.3(6) Project Red Line Drawings

The Contractor shall submit Project Red Line Drawings in accordance with the following.

Red line drawings refer to those documents maintained and annotated by the Contractor during construction and is defined as, a neatly and legibly marked set of Contract drawings showing any changes made to the original details of work.

The Contractor shall maintain drawings in good condition; protect from deterioration and keep in a clean, dry, and secure location. The Project Red Line Drawings shall not be used for construction purposes.
The Contractor shall provide to the City, access to Project Red Line Drawings at all times during normal working hours.

Red line drawings shall be updated on a continuous basis. The Contractor shall bring the up-to-date drawings to a monthly "red line review" meeting where the Engineer will

verify the maintenance of the Project Red Line Drawings as part of the condition precedent to approving the monthly progress payment disbursement process. Monthly progress payments to the Contractor may not be processed, if red line information for the involved work to date has not been accurately recorded on the Project Red Line Drawings.

At the completion of the construction work, prior to pre-final payment, all Project Red Line Drawings shall be submitted to the Engineer.

A. Project Red Line Drawings:

Do not permanently conceal any work until required information has been recorded. Mark drawings to show the actual installation where the installation varies from the work as originally shown on the Contract drawings or indicated in the Contract Specifications. Give particular attention to information on concealed elements that would be difficult to measure and record at a later date.

1. Changes and information shall be clearly drawn, described and shown technically correct.

2. Mark drawings with red erasable pencil.

3. Record data as soon as possible after obtaining it.

4. Mark any new information.

5. Keep accurate measurements of horizontal and vertical locations of underground services and utilities.

6. Mark any changes made where installation varies from that shown originally, such as, in materials, equipments, locations, alignments, elevations, and any other dimensions of the work.

7. For any work not demolished, abated, or salvaged, cross out and appropriately annotate “Not Complete”.

8. Indicate revisions to drawings with a “cloud” drawn around the revision and note date the revision(s) was made.

9. Note Request For Change (RFC), Request For Information (RFI), and similar identification, where applicable.

B. Format:

Identify and date each print; include the designation “PROJECT RED LINE DRAWINGS” in a prominent location.

1. Prints: Organize Red Line Drawings into manageable sets. Include identification on cover sheets.

2. Identify cover sheets as follows:

- Specification No.
- Project Name
- Date
- “PROJECT RED LINE DRAWINGS”
- Name of Engineer
- Name of Contractor

3. Electronic Copies: Scan full-size (dimension size: 22x34) Project Red Line Drawings and submit, on a CD-R, in pdf format.

The lump sum Contract price for “Project Red Line Drawings” shall be full pay for all costs associated with, including but not limited to, documenting, revising, updating, maintaining, and submitting red line drawings at the completion of construction work.

1-05.4 Conformity With and Deviations from Plans and Stakes

Supplement this section with the following:

Roadway and Utility Surveys
(July 23, 2015 APWA GSP, Option 1)

The Engineer shall furnish to the Contractor one time only all principal lines, grades, and measurements the Engineer deems necessary for completion of the work. These shall generally consist of one initial set of:

1. Slope stakes for establishing grading;
2. Curb grade stakes;
3. Centerline finish grade stakes for pavement sections wider than 25 feet; and
4. Offset points to establish line and grade for underground utilities such as water, sewers, and storm drains.

On alley construction projects with minor grade changes, the Engineer shall provide only offset hubs on one side of the alley to establish the alignment and grade.

Supplement this section with the following:

Bridge and Structure Surveys
(July 23, 2015 APWA GSP, Option 2)

For all structural work such as bridges and retaining walls, the Contractor shall retain as a part of Contractor’s organization an experienced team of surveyors.

The Contractor shall provide all surveys required to complete the structure, except the following primary survey control which will be provided by the Engineer:

1. Centerline or offsets to centerline of the structure.
2. Stations of abutments and pier centerlines.
3. A sufficient number of bench marks for levels to enable the Contractor to set grades at reasonably short distances.
4. Monuments and control points as shown in the Plans.

The Contractor shall establish all secondary survey controls, both horizontal and vertical, as necessary to assure proper placement of all project elements based on the primary control points provided by the Engineer. Survey work shall be within the following tolerances:

Stationing	± 0.01 foot
Alignment	± 0.01 foot (between successive points)
Superstructure Elevations	± 0.01 foot (from plan elevations)
Substructure Elevations	± 0.05 foot (from plan elevations)

During the progress of the work, the Contractor shall make available to the Engineer all field books including survey information, footing elevations, cross sections and quantities.

The Contractor shall be fully responsible for the close coordination of field locations and measurements with appropriate dimensions of structural members being fabricated.

1-05.7 Removal of Defective and Unauthorized Work
(October 1, 2005 APWA GSP)
Supplement this section with the following:

If the Contractor fails to remedy defective or unauthorized work within the time specified in a written notice from the Engineer, or fails to perform any part of the work required by the Contract Documents, the Engineer may correct and remedy such work as may be identified in the written notice, with Contracting Agency forces or by such other means as the Contracting Agency may deem necessary.

If the Contractor fails to comply with a written order to remedy what the Engineer determines to be an emergency situation, the Engineer may have the defective and unauthorized work corrected immediately, have the rejected work removed and replaced, or have work the Contractor refuses to perform completed by using Contracting Agency or other forces. An emergency situation is any situation when, in the opinion of the Engineer, a delay in its remedy could be potentially unsafe, or might cause serious risk of loss or damage to the public.

Direct or indirect costs incurred by the Contracting Agency attributable to correcting and remedying defective or unauthorized work, or work the Contractor failed or refused to perform, shall be paid by the Contractor. Payment will be deducted by the Engineer from monies due, or to become due, the Contractor. Such direct and indirect costs shall include in particular, but without limitation, compensation for additional professional

services required, and costs for repair and replacement of work of others destroyed or damaged by correction, removal, or replacement of the Contractor's unauthorized work.

No adjustment in Contract time or compensation will be allowed because of the delay in the performance of the work attributable to the exercise of the Contracting Agency's rights provided by this Section.

The rights exercised under the provisions of this section shall not diminish the Contracting Agency's right to pursue any other avenue for additional remedy or damages with respect to the Contractor's failure to perform the work as required.

1-05.11 Final Inspection
Delete this section and replace it with the following:

1-05.11 Final Inspections and Operational Testing
(October 1, 2005 APWA GSP)

1-05.11(1) Substantial Completion Date

When the Contractor considers the work to be substantially complete, the Contractor shall so notify the Engineer and request the Engineer establish the Substantial Completion Date. The Contractor's request shall list the specific items of work that remain to be completed in order to reach physical completion. The Engineer will schedule an inspection of the work with the Contractor to determine the status of completion. The Engineer may also establish the Substantial Completion Date unilaterally.

If, after this inspection, the Engineer concurs with the Contractor that the work is substantially complete and ready for its intended use, the Engineer, by written notice to the Contractor, will set the Substantial Completion Date. If, after this inspection the Engineer does not consider the work substantially complete and ready for its intended use, the Engineer will, by written notice, so notify the Contractor giving the reasons therefore.

Upon receipt of written notice concurring in or denying substantial completion, whichever is applicable, the Contractor shall pursue vigorously, diligently and without unauthorized interruption, the work necessary to reach Substantial and Physical Completion. The Contractor shall provide the Engineer with a revised schedule indicating when the Contractor expects to reach substantial and physical completion of the work.

The above process shall be repeated until the Engineer establishes the Substantial Completion Date and the Contractor considers the work physically complete and ready for final inspection.

1-05.11(2) Final Inspection and Physical Completion Date

When the Contractor considers the work physically complete and ready for final inspection, the Contractor by written notice, shall request the Engineer to schedule a final inspection. The Engineer will set a date for final inspection. The Engineer and the Contractor will then make a final inspection and the Engineer will notify the Contractor in writing of all particulars in which the final inspection reveals the work incomplete or

unacceptable. The Contractor shall immediately take such corrective measures as are necessary to remedy the listed deficiencies. Corrective work shall be pursued vigorously, diligently, and without interruption until physical completion of the listed deficiencies. This process will continue until the Engineer is satisfied the listed deficiencies have been corrected.

If action to correct the listed deficiencies is not initiated within 7 days after receipt of the written notice listing the deficiencies, the Engineer may, upon written notice to the Contractor, take whatever steps are necessary to correct those deficiencies pursuant to Section 1-05.7.
The Contractor will not be allowed an extension of Contract time because of a delay in the performance of the work attributable to the exercise of the Engineer's right hereunder.

Upon correction of all deficiencies, the Engineer will notify the Contractor and the Contracting Agency, in writing, of the date upon which the work was considered physically complete. That date shall constitute the Physical Completion Date of the Contract, but shall not imply acceptance of the work or that all the obligations of the Contractor under the contract have been fulfilled.

1-05.11(3) Operational Testing

It is the intent of the Contracting Agency to have at the Physical Completion Date a complete and operable system. Therefore when the work involves the installation of machinery or other mechanical equipment; street lighting, electrical distribution or signal systems; irrigation systems; buildings; or other similar work it may be desirable for the Engineer to have the Contractor operate and test the work for a period of time after final inspection but prior to the physical completion date. Whenever items of work are listed in the Contract Provisions for operational testing they shall be fully tested under operating conditions for the time period specified to ensure their acceptability prior to the Physical Completion Date. During and following the test period, the Contractor shall correct any items of workmanship, materials, or equipment which prove faulty, or that are not in first class operating condition. Equipment, electrical controls, meters, or other devices and equipment to be tested during this period shall be tested under the observation of the Engineer, so that the Engineer may determine their suitability for the purpose for which they were installed. The Physical Completion Date cannot be established until testing and corrections have been completed to the satisfaction of the Engineer.

The costs for power, gas, labor, material, supplies, and everything else needed to successfully complete operational testing, shall be included in the unit Contract prices related to the system being tested, unless specifically set forth otherwise in the proposal.

Operational and test periods, when required by the Engineer, shall not affect a manufacturer's guaranties or warranties furnished under the terms of the Contract.

Add the following new section:

1-05.12(1) One-Year Guarantee Period
(March 8, 2013 APWA GSP)

The Contractor shall return to the project and repair or replace all defects in workmanship and material discovered within one year after Final Acceptance of the Work. The Contractor shall start work to remedy any such defects within 7 calendar days of receiving Contracting Agency's written notice of a defect, and shall complete such work within the time stated in the Contracting Agency's notice. In case of an emergency, where damage may result from delay or where loss of services may result, such corrections may be made by the Contracting Agency's own forces or another Contractor, in which case the cost of corrections shall be paid by the Contractor. In the event the Contractor does not accomplish corrections within the time specified, the work will be otherwise accomplished and the cost of same shall be paid by the Contractor.

When corrections of defects are made, the Contractor shall then be responsible for correcting all defects in workmanship and materials in the corrected work for one year after acceptance of the corrections by Contracting Agency.

This guarantee is supplemental to and does not limit or affect the requirements that the Contractor's work comply with the requirements of the Contract or any other legal rights or remedies of the Contracting Agency.

1-05.13 Superintendents, Labor and Equipment of Contractor
(August 14, 2013 APWA GSP)

Delete the sixth and seventh paragraphs of this section.

1-05.14 Cooperation With Other Contractors
Section 1-05.14 is supplemented with the following:

(*****)
Other Contracts Or Other Work
It is anticipated that the following work adjacent to or within the limits of this project will be performed by others and may require coordination to phase and/or sequence work accordingly. Coordination efforts to phase and/or sequence construction work with other contractors or other work shall be at no additional cost to the agency:

Puget Sound Energy (PSE): PSE will be relocating gas utility lines within the project area to avoid conflicts with the project's roadway and utility construction work. The gas utility line relocation is located approximately between Fawcett St and Court E within the project area. PSE anticipates completing the gas utility line relocation prior to the start of the project's construction. However, the timing of the project's construction activities may need coordination if there are unforeseen delays with the completion of the gas line relocation. PSE Design Plan Set provided in Appendix E.

1-05.15 Method of Serving Notices
(December 30, 2022 APWA GSP)
Revise the second paragraph to read:

All correspondence from the Contractor shall be directed to the Project Engineer. All correspondence from the Contractor constituting any notification, notice of protest, notice

of dispute, or other correspondence constituting notification required to be furnished under the Contract, must be in paper format, hand delivered or sent via mail delivery service to the Project Engineer's office. Electronic copies such as e-mails or electronically delivered copies of correspondence will not constitute such notice and will not comply with the requirements of the Contract.

Add the following new section:

1-05.16 Water and Power
(October 1, 2005 APWA GSP)

The Contractor shall make necessary arrangements, and shall bear the costs for power and water necessary for the performance of the work, unless the Contract includes power and water as a pay item.

SUBMITTAL TRANSMITTAL FORM

TPU S 17th Street Court D/E
Project Number PWR-01216-09
Specification No. PW23-0090F

ATTN: Construction Division Date: _____

Submittal Number _____

Specification Number _____ Bid Item No. _____

Submittal Description _____

We are sending you:

Copies	Date	Page	Description

Transmitted: ☐ Submittals (Product Data) for information only.
☐ Submittals for review and comment.

Remarks: _____
_____
_____
_____
_____

Certify Either A or B:

☐ A. This document has been detail-checked for accuracy of content and for compliance with the Contract documents **(no exceptions)**. The information contained herein has been fully coordinated with all involved Subcontractors.

☐ B. This document has been detail-checked for accuracy of content and for compliance with the Contract documents **except for the attached deviations**. The information contained herein has been fully coordinated with all involved Subcontractors.

Certified By: _____
Signature

END OF SECTION

1-06 CONTROL OF MATERIAL

1-06.1 Approval of Materials Prior To Use
(September 15, 2010 Tacoma GSP)
Delete this section and replace it with the following:

All materials and equipment shall be submitted for review in accordance with section 1-05.3 of these special provisions.

For aggregates, the Contractor shall notify the Engineer of all proposed aggregates. The Contractor shall use the Aggregate Source Approval (ASA) Database.

All equipment, materials, and articles incorporated into the permanent Work:

1. Shall be new, unless the Special Provisions or Standard Specifications permit otherwise;

2. Shall meet the requirements of the Contract and be approved by the Engineer;

3. May be inspected or tested at any time during their preparation and use; and

4. Shall not be used in the Work if they become unfit after being previously approved.

1-06.1(1) Qualified Products List (QPL)
This section is revised in its entirety to read:

QPL's are not accepted by the City.

1-06.1(2) Request for Approval of Material (RAM)
This section is deleted in its entirety.

1-06.6 Recycled Materials
(January 4, 2016 APWA GSP)

Delete this section, including its subsections, and replace it with the following:

The Contractor shall make their best effort to utilize recycled materials in the construction of the project. Approval of such material use shall be as detailed elsewhere in the Standard Specifications.

Prior to Physical Completion the Contractor shall report the quantity of recycled materials that were utilized in the construction of the project for each of the items listed in Section 9-03.21. The report shall include hot mix asphalt, recycled concrete aggregate, recycled glass, steel furnace slag and other recycled materials (e.g. utilization of on-site material and aggregates from concrete returned to the supplier). The Contractor's report shall be provided on DOT form 350-075 Recycled Materials Reporting.

END OF SECTION

1-07 LEGAL RELATIONS AND RESPONSIBILITIES TO THE PUBLIC

1-07.1 Laws to be Observed
(October 1, 2005 APWA GSP)
Supplement this section with the following:

In cases of conflict between different safety regulations, the more stringent regulation shall apply.

The Washington State Department of Labor and Industries shall be the sole and paramount administrative agency responsible for the administration of the provisions of the Washington Industrial Safety and Health Act of 1973 (WISHA).

The Contractor shall maintain at the project site office, or other well known place at the project site, all articles necessary for providing first aid to the injured. The Contractor shall establish, publish, and make known to all employees, procedures for ensuring immediate removal to a hospital, or doctor's care, persons, including employees, who may have been injured on the project site. Employees should not be permitted to work on the project site before the Contractor has established and made known procedures for removal of injured persons to a hospital or a doctor's care.

The Contractor shall have sole responsibility for the safety, efficiency, and adequacy of the Contractor's plant, appliances, and methods, and for any damage or injury resulting from their failure, or improper maintenance, use, or operation. The Contractor shall be solely and completely responsible for the conditions of the project site, including safety for all persons and property in the performance of the work. This requirement shall apply continuously, and not be limited to normal working hours. The required or implied duty of the Engineer to conduct construction review of the Contractor's performance does not, and shall not, be intended to include review and adequacy of the Contractor's safety measures in, on, or near the project site.

1-07.2 State Taxes
(January 6, 2015 TACOMA GSP)
Supplement this section with the following:

Washington State Department of Revenue Rules 170 and 171 shall apply as shown in the Proposal and per Section 1-07.2 of the WSDOT and APWA Standard Specifications for Road, Bridge, and Municipal Construction.

1-07.2(3) Services
Supplement this section with the following:

The Contractor shall not collect retail sales tax from the Contracting Agency on any contract wholly for professional or other services (as defined in Washington State Department of Revenue Rules 138 and 244).

1-07.9 Wages

1-07.9(5)C Certified Payrolls
(******)
The second sentence of the first paragraph is revised to read:

Weekly certified payrolls shall be submitted for the Contractor and all lower tier subcontractors or agents.

This section is supplemented with the following:

Where fringe benefits are paid in cash, certified payrolls shall include the fringe benefit dollar amount paid to each employee for each employee classification.

Where fringe benefits are paid into approved plans, funds, or programs, the amount of the fringe benefits shall be identified in the “Benefit Distribution” section of the Certified Payroll Affirmation form.

1-07.15 Temporary Water Pollution/Erosion Control
(March 23, 2010 Tacoma GSP)
This section is supplemented with the following:

Stormwater or dewatering water that has come in contact with concrete rubble, concrete pours, or cement treated soils shall be maintained to pH 8.5 or less before it is allowed to enter waters of the State or the City stormwater system. If pH exceeds 8.5, the Contractor shall immediately discontinue work and initiate treatment according to the plan to lower the pH. Work may resume, with treatment, once the pH of the stormwater is 8.5 or less or it can be demonstrated that the runoff will not reach surface waters or the City stormwater system.

High pH process water shall not be discharged to waters of the State or the City stormwater system. Unless specific measures are identified in the Special Provisions, high pH water may be infiltrated, dispersed in vegetation or compost, or discharged to a sanitary sewer system. Disposal shall be in accordance with the City of Tacoma Surface Water Management Manual or to City wastewater system with proper approval. Water being infiltrated or dispersed shall have no chance of discharging directly to waters of the State or the City stormwater system, including wetlands or conveyances that indirectly lead to waters of the State. High pH process water shall be treated to within a range of 6.5 to 8.5 pH units prior to infiltration to ensure the discharge does not cause a violation of groundwater quality standards. If water is discharged to the sanitary sewer, the Contractor shall provide a copy of permits and requirements for placing the material into a sanitary sewer system prior to beginning the work. Process water may be collected and disposed of by the Contractor off the project site. The Contractor shall provide a copy of the permit for an approved waste site for the disposal of the process water prior to the start of work that generates the process water. A Special Approved Discharge permit shall be required for all discharges to the sanitary sewer system.

1-07.15(1) Spill Prevention, Control and Countermeasures Plan
(February 9, 2011 Tacoma GSP)
This section is revised to read:

The Contractor shall prepare a project-specific spill prevention, control, and countermeasures plan (SPCC Plan) that will be used for the duration of the project. The

Contractor shall submit the plan to the Project Engineer no later than the date of the preconstruction conference. No on-site construction activities may commence until the Contracting Agency accepts an SPCC Plan for the project.

The SPCC Plan shall address all fuels, petroleum products, hazardous materials, and other materials as defined in Chapter 447 of the WSDOT Environmental Procedures Manual (M 31-11). Occupational safety and health requirements that may pertain to SPCC Plan implementation are contained in, but not limited to, WAC 296-824 and WAC 296-843.

Implementation Requirements

The SPCC Plan shall be updated by the Contractor throughout project construction so that the written plan reflects actual site conditions and practices. The Contractor shall update the SPCC Plan at least annually and maintain a copy of the updated SPCC Plan on the project site. All project employees shall be trained in spill prevention and containment, and they shall know where the SPCC Plan and spill response kits are located and have immediate access to them.

If hazardous materials are encountered or spilled during construction, the Contractor shall do everything possible to control and contain the material until appropriate measures can be taken. The Contractor shall supply and maintain spill response kits of appropriate size within close proximity to hazardous materials and equipment.

The Contractor shall implement the spill prevention measures identified in the SPCC Plan before performing any of the following:

1. Placing materials or equipment in staging or storage areas.

2. Refueling, washing, or maintaining equipment.

3. Stockpiling contaminated materials.

SPCC Plan Element Requirements

The SPCC Plan shall set forth the following information in the following order:

1. Responsible Personnel
   Identify the name(s), title(s), and contact information, including a 24/7 emergency contact number, for the personnel responsible for implementing and updating the plan, including all spill responders.

2. Spill Reporting
   List the names and telephone numbers of the Federal, State, and local agencies the Contractor shall notify in the event of a spill. The City of Tacoma contact will be the Wastewater Treatment Plant Operations number at 253.591.5595 and the City Source Control Spill Response number at 253.502.2222.

3. Project and Site Information
   Describe the following items:
   A. The project Work.
   B. The site location and boundaries.

C. The drainage pathways from the site, including both stormwater and sanitary conveyance pathways.
D. Nearby waterways and sensitive areas and their distances from the site.

4. Potential Spill Sources

Describe each of the following for all potentially hazardous materials brought or generated on-site (including materials used for equipment operation, refueling, maintenance, or cleaning):

A. Name of material and its intended use.
B. Estimated maximum amount on-site at any one time.
C. Location(s) (including any equipment used below the ordinary high water line) where the material will be staged, used, and stored and the distance(s) from nearby waterways and sensitive areas.
D. Decontamination location and procedure for equipment that comes into contact with the material.
E. Disposal procedures.
F. Include a Material Safety Data Sheet (MSDS) for each potentially hazardous material.

5. Pre-Existing Contamination

Describe any pre-existing contamination and contaminant sources (such as buried pipes or tanks) in the project area that are described in the Contract documents. Identify equipment and work practices that will be used to prevent the release of contamination.

6. Spill Prevention and Response Training

Describe how and when all personnel (including refueling Contractors and Subcontractors) will be trained in spill prevention, containment, and response in accordance with the Plan. Describe how and when all spill responders will be trained in accordance with WAC 296-824.

7. Spill Prevention

Describe the following items:

A. Spill response kit contents and location(s).
B. Security measures for potential spill sources.
C. Secondary containment practices and structures for all containers to handle the maximum volume of potential spill of hazardous materials.
D. Methods used to prevent stormwater from contacting hazardous materials.
E. Site inspection procedures and frequency.
F. Equipment and structure maintenance practices.
G. Daily inspection and cleanup procedures that ensure all equipment used below the ordinary high water line is free of all external petroleum-based products.
H. Refueling procedures for equipment that cannot be moved from below the ordinary high water line.

8. Spill Response

Outline the response procedures the Contractor will follow for each scenario listed below. Include a description of the actions the Contractor shall take and the specific on-site spill response equipment that shall be used to assess the spill,

secure the area, contain and eliminate the spill source, and clean up and dispose of spilled and contaminated material.

Response procedures shall be outlined in the Spill Response section and shall include notification to the City of Tacoma Wastewater Treatment Plant Operations number at 253.591.5595 and the City Source Control Spill Response number at 253.502.2222.

a. A spill of each type of hazardous material at each location identified in 4, above.
b. Stormwater that has come into contact with hazardous materials.
c. Drainage pathways from the site, including both stormwater and sanitary conveyance pathways.
d. A release or spill of any unknown pre-existing contamination and contaminant sources (such as buried pipes or tanks) encountered during project Work.
e. A spill occurring during Work with equipment used below the ordinary high water line.

If the Contractor will use a Subcontractor for spill response, provide contact information for the Subcontractor under item 1 (above), identify when the Subcontractor will be used, and describe actions the Contractor shall take while waiting for the Subcontractor to respond.

9. Project Site Map

Provide a map showing the following items:

A. Site location and boundaries.
B. Site access roads.
C. Drainage pathways from the site.
D. Nearby waterways and sensitive areas.
E. Hazardous materials, equipment, and decontamination areas identified in 4, above.
F. Pre-existing contamination or contaminant sources described in 5, above.
G. Spill prevention and response equipment described in 7 and 8, above.

10. Spill Report Forms

Provide a copy of the spill report form(s) that the Contractor will use in the event of a release or spill.

Payment

Payment will be made in accordance with Section 1-04.1 for the following Bid item when it is included in the Proposal:

"SPCC Plan," lump sum.

When the written SPCC Plan is accepted by the Contracting Agency, the Contractor shall receive 50-percent of the lump sum Contract price for the plan.

The remaining 50-percent of the lump sum price will be paid after the materials and equipment called for in the plan are mobilized to the project.

The lump sum payment for “SPCC Plan” shall be full pay for:

1. All costs associated with creating the accepted SPCC Plan.

2. All costs associated with providing and maintaining the on-site spill prevention equipment described in the accepted SPCC Plan.

3. All costs associated with providing and maintaining the on-site standby spill response equipment and materials described in the accepted SPCC Plan.

4. All costs associated with implementing the spill prevention measures identified in the accepted SPCC Plan.

5. All costs associated with updating the SPCC Plan as required by this Specification.

As to other costs associated with releases or spills, the Contractor may request payment as provided for in the Contract. No payment shall be made if the release or spill was caused by or resulted from the Contractor’s operations, negligence, or omissions.

1-07.16 Protection and Restoration of Property

1-07.16(1) Private/Public Property
(January 13, 2011 Tacoma GSP)
This section is supplemented with the following:

Stockpiling in City of Tacoma right-of-way or on existing or new improvements shall not occur unless approved by the Engineer. All stockpile sites shall be restored to as good or better condition.

The Contractor shall contact all property owners and tenants in the vicinity of this project, via newsletter/mailing, a minimum of one (1) week prior to start of construction. The Contractor shall submit a draft of the property owner notification prior to posting/mailing.

The newsletter/mailing shall advise the owners and tenants of the construction schedule and indicate the Contractor’s name, contact person, and telephone numbers.

1-07.16(4) Archaeological and Historical Objects

This section is supplemented with the following:

In the event of any archeological discoveries the contractor shall act in accordance with the Inadvertent Discovery Plan included in Appendix H, which shall govern over this section.

1-07.16(4)A Inadvertent Discovery of Human Skeletal Remains
(******)
This section is supplemented with the following:

In the event any archaeological or historical materials are encountered, including the inadvertent discovery of human skeletal remains, work must stop in the immediate area and the Contractor shall follow the Plan and Procedures for the Inadvertent Discovery Plan included in Appendix H of these Special Provisions.

1-07.17 Utilities and Similar Facilities
(******)
The first paragraph is supplemented with the following:

Public and private utilities or their Contractors will furnish all work necessary to adjust, relocate, replace, or construct their facilities unless otherwise provided for in the Plans or these Special Provisions. Such adjustment, relocations, replacement, or construction will be done within the time for performance of this project. The Contractor shall coordinate their work with such adjustment, relocation, or replacement of utility work. This may require the Contractor to phase their work in a manner that will allow for the utility work.

The Contractor shall coordinate their work with all utilities and other organizations which have to adjust or revise their facilities within the project area. These may include, but are not limited to:

- City of Tacoma Light Division, Contact: Kevin Kelley, phone: (253) 502-8229
- City of Tacoma Water Division, Contact: Kimberly Baard, phone: (253) 396-3317
- City of Tacoma Traffic Division, Signal/Streetlight Shop, phone: (253) 591-5287
- Rainier Connect, Contact: Brian Munson, phone: (253) 312-2819; Brian.Munson@Rainierconnect.net
- Puget Sound Energy, Contact: Mike Klapperich, Electric, phone: (253) 313-3790; michael.klapperich@pse.com OR Amber Uhls, Gas, phone: (253) 476-6137; amber.uhls@pse.com
- Lumen, Contact: Al (Aliyah) Skaro, relocations@lumen.com
- Terra Tech LLC, Contact: Chris Janoski, phone: (303) 552-8545; chrisjanoski@terratechllc.net
- Comcast, Contact: Todd Gallant, phone: (253) 878-4955, todd_gallant@cable.comcast.com
- AT&T/Siena Engineering Group, Contact: Louie Van Hollebeke, phone: (425) 896-9850; louie.vanhollebeke@sienaengineeringgroup.com OR Steve Duppenthaler, phone: (425) 286-3822; sd1891@att.com OR Roberta Anderson, phone: (425) 896-9839; roberta.anderson@sienaengineeringgroup.com
- Level 3 Communications, Level3NetworkRelocations@Level3.com
- One-Number Locator Service “One Call System” telephone **1-800-424-5555**
- Verizon, Contact: David Lacombe, phone: (206) 305-5366
- MCI Metro Utility, Contact: Brad Landis, phone: (425) 229-3123
- T-Mobile, Contact: Steven Schauer, Phone: (360) 402-7725; sschauer@cogentco.com
- Zayo Communications, Contact: Phil Braum, phil.braum@zayo.com ; zayo.relo.washington@zayo.com

If the Contractor plans to excavate or trench within ten (10) feet of any utility pole or other electric or water utility structure owned by the City of Tacoma, the Contractor shall contact the City of Tacoma, Department of Public Utilities, Field Coordinator, telephone

number 502-8044, and arrange for an inspection before proceeding. The Contractor shall perform, at the Contractor's expense, such additional work as is required to protect the pole or structure from subsidence. The Contractor may be directed to suspend work at the site of any such excavation until such utility structures are adequately protected. http://www.govme.com/Common/govME/MyTacoma/CollectionCalendar.aspx and coordinate their work appropriately or call (253) 591-5543 for detailed schedules within the project limits.

1-07.18 Public Liability and Property Damage Insurance
Delete this section in its entirety, and replace it with the following:

1-07.18 Insurance
(December 17, 2019 Tacoma GSP)

During the course and performance of the services herein specified, the Contractor will maintain the insurance coverage in the amounts and in the manner specified in the City of Tacoma Insurance Requirements as is applicable to the services and deliverables provided under this Contract. The City of Tacoma Insurance Requirements document is fully incorporated herein by reference.

Failure by the Contracting Agency to identify a deficiency in the insurance documentation provided by the Contractor or failure of the Contracting Agency to demand verification of coverage or compliance by the Contractor with these insurance requirements shall not be construed as a waiver of the Contractor’s obligation to maintain such insurance.

This section is supplemented with the following;

A copy of the City of Tacoma Insurance Requirements is included in Part V of these specifications.

1-07.23 Public Convenience and Safety

1-07.23(1) Construction Under Traffic
(May 2, 2017 APWA GSP)

Revise the third sentence of the second paragraph to read:

Accessibility to existing or temporary pedestrian push buttons shall not be impaired; if approved by the Contracting Agency activating pedestrian recall timing or other accommodation may be allowed during construction.

1-07.23(1) Construction under Traffic
(March 1, 2004 Tacoma GSP)
This section is supplemented with the following:

The following special traffic requirements shall be adhered to during all phases of construction:

Fawcett Avenue (arterial), Tacoma Avenue South (arterial), Market Street (arterial), South 15th Street (arterial), South 19th Street (arterial), South 17th Street^, and all associated/connecting alleys (courts) [namely Court D^ and Court E^] shall remain fully open to two-way vehicular (in separate lanes or single bi-directional space for alleys/courts) and pedestrian traffic at all times.
EXCEPTION:

1. Non-arterial classified roadways, including alleys/courts, (see special condition below for those identified with "^") are permitted to be closed to traffic for corresponding active construction work, in accordance with the following situations:
   i. During potential construction working hours (i.e., weekdays 7 AM to 7 PM) when arrangements for local/property/business access have been made in advance through coordination between the requestor (if specific), the contractor, and the City (which would represent the unspecific needs of the public); and
   ii. During potential construction working hours (i.e., weekdays 7 AM to 7 PM) so long as special and/or emergency access can be provided when needed.
   iii. ^Full closure of South 17th Street will only be considered for approval with special supporting reasoning; otherwise see Section 6 below for temporary traffic control allowances.
   iv. ^For Court D and Court E, special provisions will be needed based on the identified roadway providing sole access to specific properties, which would need to be maintained as part of the construction or other alternate access means established with the property owners/tenants. Additionally, only one of the two may be permitted to be closed at a given time unless otherwise approved by the City in advance.

2. During non-construction hours, the project area shall be left in a state that permits walkability, mobility, and/or on-street parking (as was allowable prior to project start) so long as the permitted vehicular, pedestrian, and/or parking access does not hamper the flow of traffic, temporary traffic control, safety, and/or the state of the area does not preclude legal access (unless otherwise arranged) for affected properties.

3. Project work areas along, within, and/or adjacent to arterials (as identified above), or intersecting other arterial streets, shall not hinder the safety or traffic operations of any arterial street such that two-way vehicular traffic in separate lanes cannot be maintained at all times (which can include parking restrictions to allow for the roadway space needed). If the work occurring (during active construction or during non-construction hours) on an arterial street cannot practicably be completed while maintaining two-way traffic (and the specifications within Except #6 below could not be met), then a directional road closure plan that still allows an uninterrupted single direction of travel and provides an accompanying directional detour must be established using an alternate arterial-based route to be submitted for review and approval by the City. The temporary control of traffic in this manner shall only be considered for use during the hours between 9 AM and 3 PM and shall be limited to the shortest extent possible and/or phased in a manner than minimizes the impact to the arterial roadway and

associated transportation network. An intersection specific traffic control plan must be developed for work areas that include arterial streets intersecting one another and that plan must be submitted for City review and approval at least 15 working days in advance of the work commencing.

4. Spotters to assist pedestrians through or around the work zone must be available when called for in the Traffic Control Plans, and as noted below, and/or when deemed necessary for safe traffic operations by the City.

- Junction of South 17th Street and Courts D and E

5. Any demolition, or closure of pedestrian accessibility, at a given corner of an intersection (an alley/court access onto another roadway is not an intersection) must be limited to that given corner, with the remaining three corners at the intersection (at a minimum) being used to facilitate a pedestrian detour, until full accessibility or an accessible connection with at least one other corner can be re-established. Any temporary pedestrian access path/route that may be employed shall provide equivalent to, or better, accessibility than the unavailable path/route in accordance with the Americans with Disabilities Act and the Proposed Accessibility Guidelines for Pedestrian Facilities in the Public Right-of-Way (PROWAG) and shall only direct pedestrians to approved pedestrian routes and legal locations (i.e., only at public intersections or marked mid-block crosswalks) for roadway crossings.

6. South 17th Street may be reduced to one-lane flagger controlled two-way operations for appropriate stages of work occurring during weekdays from 7AM to 7PM that would only require temporary holding/queuing of a given direction of traffic. Held traffic and resulting traffic queues would not be permitted to impact/accumulate into any nearby arterial intersections and any intermediate intersections affected would require additional flaggers positioned to assist with traffic (vehicle and pedestrian) movements. If that result was expected or observed, then a directional closure of South 17th Street would need to be proposed as part of a traffic control plan and associated detour plan (for the closed direction of traffic).

7. Proposed work and associated temporary traffic control plans, even if abiding by the above allowances, may not always be permitted to occur concurrently depending on the nature of the work, the temporary traffic control provisions in use, and/or the impact of the work/traffic control. Any proposed concurrency shall be indicated in the contractor's temporary traffic control plan submittal, which will then be reviewed by the City, and approved as allowable.

To minimize the disruption to access to adjacent properties/businesses, and to Pierce Transit operations, the lane closure area shall be limited to that area of active work and necessary for appropriate lane closure tapers. The Contractor shall stage work to maintain access to and egress from all properties at all times. This could require multiday advance coordination with businesses that have specific access needs during construction, which could result in phased concrete pours or weekend work.

A safe pedestrian access shall be provided at all times through the project area. All lane closures shall be coordinated with the adjacent businesses, other contractors working within the project vicinity, local transit agencies and the City.

Where, in the opinion of the Engineer, parking is a hazard to through traffic or to the construction work, parking may be restricted either entirely or during the time when it creates a hazard. Signs for restricting parking shall be approved by the City and placed by the Contractor. The Contractor shall be responsible for and shall maintain all such signs. The replacement of signs restricting parking shall be as approved by the Engineer.

The Contractor shall notify and coordinate with all property owners, business owners, and tenants of detours, street and alley closures, or other restrictions that may interfere with their access. Notification shall be at least seventy-two (72) hours in advance for residential properties and at least five (5) working days in advance for commercial properties.

Emergency traffic, such as police, fire, and disaster units, shall be provided access at all times. In addition, the Contractor shall coordinate Contractor activities with all disposal firms and transit bus service that may be operating in the project area.

If street closures or lane restrictions, not provided for in the Specifications, are allowed subsequent to award of the contract, an equitable adjustment of the Contract amount shall be negotiated.

It is the intent of the Contract to effectively prevent the deposition of debris on streets in areas of public traffic or where such debris may be transported into a drainage system. When construction operations are such that debris from the work is deposited on the streets, the Contractor shall, at a minimum, remove on a daily basis any deposits or debris which may accumulate on the roadway surface. Should daily removal be insufficient to keep the streets clean, the Contractor shall perform removal operations on a more frequent basis. If the Engineer determines that a more frequent cleaning is impractical or if the Contractor fails to keep the streets free from deposits and debris resulting from the work, the Contractor shall, upon order of the Engineer, provide facilities for and remove all deposits from the tires or between wheels before trucks or other equipment will be allowed to travel over paved streets. Should the Contractor fail or refuse to clean the streets in question, or the trucks or equipment in question, the Engineer may order the work suspended at the Contractor's risk until compliance with Contractor's obligations is assured, or the Engineer may order the streets in question cleaned by others and such costs incurred by the City in achieving compliance with these contract requirements, including cleaning of the streets, shall be deducted from moneys due or to become due the Contractor on monthly estimate. The Contractor shall have no claim for delay or additional costs should the Engineer choose to suspend the Contractor's work until compliance is achieved.

1-07.23(2) Construction and Maintenance of Detours
(April 1, 2018 Tacoma GSP)
This section is supplemented with the following:

Detour signing during any allowed road closures shall be in accordance with Detour Plans, when included in the Contract Documents. When plans are not included in the Contract Documents, the Contractor shall submit plans for detours in accordance with the "Manual on Uniform Traffic Control Devices (MUTCD)". In addition, where the Contractor believes an alternate plan will safely and adequately maintain vehicular and

pedestrian traffic, the Contractor may submit alternate plans to those for traffic control and detours required by MUTCD or contract documents. Such alternate plans must comply with the MUTCD and shall be in writing and submitted to the Engineer at least fifteen (15) days in advance of their intended use. In general, detouring of arterial traffic must be accomplished on streets designated as City Arterials. Detouring of arterial traffic on non-arterial streets will not be allowed. The acceptance of any alternate plan shall be entirely at the discretion of the Engineer and the Contractor shall have no claim by reason of a plan being rejected or modified, nor shall there be any additional payment by reason of using a substitute plan.

The Contractor shall notify the Engineer three (3) working days in advance of implementation of any street closures/detours allowed under the Contract. Advance notice signing shall be placed a minimum of three (3) working days prior to implementation of any street closure/detour.

The contractor shall give Pierce Transit notification a minimum of 10 working days prior to any street closure. The Contractor shall notify all other entities listed below a minimum of five (5) working days prior to any street closure:

Tacoma Fire Dept.	(253-591-5775)
Tacoma Police Dept.	(253-591-5932)
LESA Communications Center	(253-798-4721 - Opt.#2)
Tacoma Public Schools Transportation Office	(253-571-1853)
Pierce Transit	(253-377-5027)
Tacoma Environmental Services Solid Waste	(253-591-5544)
Tacoma Public Works Engineering Division	(253-591-5500)
Tacoma Public Works Streets and Grounds	(253-591-5495)

1-07.24 Rights of Way
(July 23, 2015 APWA GSP)

Delete this section and replace it with the following:

Street Right of Way lines, limits of easements, and limits of construction permits are indicated in the Plans. The Contractor's construction activities shall be confined within these limits, unless arrangements for use of private property are made.

Generally, the Contracting Agency will have obtained, prior to bid opening, all rights of way and easements, both permanent and temporary, necessary for carrying out the work. Exceptions to this are noted in the Bid Documents or will be brought to the Contractor's attention by a duly issued Addendum.

Whenever any of the work is accomplished on or through property other than public Right of Way, the Contractor shall meet and fulfill all covenants and stipulations of any easement agreement obtained by the Contracting Agency from the owner of the private property. Copies of the easement agreements may be included in the Contract Provisions or made available to the Contractor as soon as practical after they have been obtained by the Engineer.

Whenever easements or rights of entry have not been acquired prior to advertising, these areas are so noted in the Plans. The Contractor shall not proceed with any portion of the work in areas where right of way, easements or rights of entry have not been acquired until the Engineer certifies to the Contractor that the right of way or easement is available or that the right of entry has been received. If the Contractor is delayed due to acts of omission on the part of the Contracting Agency in obtaining easements, rights of entry or right of way, the Contractor will be entitled to an extension of time. The Contractor agrees that such delay shall not be a breach of contract.

Each property owner shall be given 48 hours notice prior to entry by the Contractor. This includes entry onto easements and private property where private improvements must be adjusted.

The Contractor shall be responsible for providing, without expense or liability to the Contracting Agency, any additional land and access thereto that the Contractor may desire for temporary construction facilities, storage of materials, or other Contractor needs. However, before using any private property, whether adjoining the work or not, the Contractor shall file with the Engineer a written permission of the private property owner, and, upon vacating the premises, a written release from the property owner of each property disturbed or otherwise interfered with by reasons of construction pursued under this contract. The statement shall be signed by the private property owner, or proper authority acting for the owner of the private property affected, stating that permission has been granted to use the property and all necessary permits have been obtained or, in the case of a release, that the restoration of the property has been satisfactorily accomplished. The statement shall include the parcel number, address, and date of signature. Written releases must be filed with the Engineer before the Completion Date will be established.

END OF SECTION

1-08 PROSECUTION AND PROGRESS

Add the following new section:

1-08.0 Preliminary Matters
(May 25, 2006 APWA GSP)

1-08.0(1) Preconstruction Conference
(October 10, 2008 APWA GSP)

Prior to the Contractor beginning the work, a preconstruction conference will be held between the Contractor, the Engineer and such other interested parties as may be invited. The purpose of the preconstruction conference will be:

2. To review the initial progress schedule;
3. To establish a working understanding among the various parties associated or affected by the work;
4. To establish and review procedures for progress payment, notifications, approvals, submittals, etc.;
5. To establish normal working hours for the work;
6. To review safety standards and traffic control; and
7. To discuss such other related items as may be pertinent to the work.

The Contractor shall prepare and submit at the preconstruction conference the following:

1. A breakdown of all lump sum items;
2. A preliminary schedule of working drawing submittals; and
3. A list of material sources for approval if applicable.

Add the following new section:

1-08.0(2) Hours of Work
(March 3, 2008 Tacoma GSP)

Except in the case of emergency or unless otherwise approved by the Contracting Agency, the normal straight time working hours for the contract shall be any consecutive 8-hour period between 7:00 a.m. and 6:00 p.m. of a working day with a maximum 1-hour lunch break and a 5-day work week. The normal straight time 8-hour working period for the contract shall be established at the preconstruction conference or prior to the Contractor commencing the work.

If a Contractor desires to perform work on holidays, Saturdays, Sundays, or before 7:00 a.m. or after 6:00 p.m. on any day, the Contractor shall apply in writing to the Engineer for permission to work such times. Permission to work longer than an 8-hour period between 7:00 a.m. and 6:00 p.m. is not required. Such requests shall be submitted to the Engineer no later than noon on the working day prior to the day for which the Contractor is requesting permission to work.

Permission to work between the hours of 9:00 p.m. and 7:00 a.m. during weekdays and between the hours of 9:00 p.m. and 9:00 a.m. on weekends or holidays may also be subject to noise control requirements. Approval to continue work during these hours may be revoked at any time the Contractor exceeds the Contracting Agency's noise control regulations or complaints are received from the public or adjoining property owners regarding the noise from the Contractor's operations. The Contractor shall have no claim for damages or delays should such permission be revoked for these reasons.

Permission to work Saturdays, Sundays, holidays or other than the agreed upon normal straight time working hours Monday through Friday may be given subject to certain other conditions set forth by the Contracting Agency or Engineer. These conditions may include but are not limited to: requiring the Engineer or such assistants as the Engineer may deem necessary to be present during the work; requiring the Contractor to reimburse the Contracting Agency for the costs in excess of straight-time costs for Contracting Agency employees who worked during such times, on non Federal aid projects; considering the work performed on Saturdays and holidays as working days with regards to the contract time; and considering multiple work shifts as multiple working days with respect to contract time even though the multiple shifts occur in a single 24-hour period. Assistants may include, but are not limited to, survey crews; personnel from the Contracting Agency's material testing lab; inspectors; and other Contracting Agency employees when in the opinion of the Engineer, such work necessitates their presence.

Add the following new section:

1-08.0(3) Reimbursement for Overtime Work of Contracting Agency Employees (September 29, 2009 Tacoma GSP)

Where the Contractor elects to work on a Saturday, Sunday, or holiday, or longer than an 8-hour work shift on a regular working day, as defined in the Standard Specifications, such work shall be considered as overtime work. On all such overtime work, city staff may be required at the discretion of the Engineer. In such case, the Contracting Agency may deduct from amounts due or to become due to the Contractor for the costs in excess of the straight-time costs for employees of the Contracting Agency required to work overtime hours.

The Contractor by these specifications does hereby authorize the Engineer to deduct such costs from the amount due or to become due to the Contractor.

1-08.1 Subcontracting

1-08.1(5) Restrictions on Subcontracting
(******)

Delete this section.

1-08.1(7)A Payment Certification
(******)

Delete this section.

Add the following new section:

1-08.1(12) Subcontracting – Equity in Contracting
(******)

Contractor shall follow the Equity in Contracting Program included in Part III, which shall be considered part of the Contract.

1-08.3(2)A Type A Progress Schedule
(December 30, 2022 APWA GSP)

Revise this section to read:

The Contractor shall submit 6 copies of a Type A Progress Schedule no later than at the preconstruction conference, or some other mutually agreed upon submittal time. The schedule may be a critical path method (CPM) schedule, bar chart, or other standard schedule format. Regardless of which format used, the schedule shall identify the critical path. The Engineer will evaluate the Type A Progress Schedule and approve or return the schedule for corrections within 15 calendar days of receiving the submittal.

1-08.4 Prosecution of Work
Delete this section and replace it with the following:

1-08.4 Notice to Proceed and Prosecution of Work
(July 23, 2015 APWA GSP)

Notice to Proceed will be given after the contract has been executed and the contract bond and evidence of insurance have been approved and filed by the Contracting Agency. The Contractor shall not commence with the work until the Notice to Proceed has been given by the Engineer. The Contractor shall commence construction activities on the project site within ten days of the Notice to Proceed Date, unless otherwise approved in writing. The Contractor shall diligently pursue the work to the physical completion date within the time specified in the contract. Voluntary shutdown or slowing of operations by the Contractor shall not relieve the Contractor of the responsibility to complete the work within the time(s) specified in the contract.

When shown in the Plans, the first order of work shall be the installation of high visibility fencing to delineate all areas for protection or restoration, as described in the Contract. Installation of high visibility fencing adjacent to the roadway shall occur after the placement of all necessary signs and traffic control devices in accordance with 1-10.1(2). Upon construction of the fencing, the Contractor shall request the Engineer to inspect the fence. No other work shall be performed on the site until the Contracting Agency has accepted the installation of high visibility fencing, as described in the Contract.

1-08.5 Time for Completion
(March 16, 2016 Tacoma GSP)
Revise the third and fourth paragraphs to read:

Contract time shall begin on the first working day following the Notice to Proceed Date.

Each working day shall be charged to the contract as it occurs, until the contract work is physically complete. If substantial completion has been granted and all the authorized working days have been used, charging of working days will cease. Each week the Engineer will provide the Contractor a statement that shows the number of working days: (1) charged to the contract the week before; (2) specified for the physical completion of the contract; and (3) remaining for the physical completion of the contract. The statement will also show the nonworking days and any partial or whole day the Engineer declares as unworkable. Within 10 calendar days after the date of each statement, the Contractor shall file a written protest of any alleged discrepancies in it. To be considered

by the Engineer, the protest shall be in sufficient detail to enable the Engineer to ascertain the basis and amount of time disputed. By not filing such detailed protest in that period, the Contractor shall be deemed as having accepted the statement as correct. If the Contractor is approved to work 10 hours a day and 4 days a week (a 4-10 schedule) and the fifth day of the week in which a 4-10 shift is worked would ordinarily be charged as a working day then the fifth day of that week will be charged as a working day whether or not the Contractor works on that day.

Revise the sixth paragraph to read:

The Engineer will give the Contractor written notice of the completion date of the contract after all the Contractor's obligations under the contract have been performed by the Contractor. The following events must occur before the Completion Date can be established:

1. The physical work on the project must be complete; and
2. The Contractor must furnish all documentation required by the contract and required by law, to allow the Contracting Agency to process final acceptance of the contract. The following documents must be received by the Project Engineer prior to establishing a completion date:
    a. Certified Payrolls (per Section 1-07.9(5)).
    b. Material Acceptance Certification Documents
    c. Reports of Amounts Credited as EIC Participation, as required by the Contract Provisions.
    d. Final Contract Voucher Certification
    e. Copies of the approved "Affidavit of Prevailing Wages Paid" for the Contractor and all Subcontractors
    f. Property owner releases per Section 1-07.24

This section is supplemented with the following:
(March 1, 2004 Tacoma GSP)

This project shall be physically completed within ***50*** working days.

1-08.9 Liquidated Damages
(March 3, 2021 APWA GSP, Option B)

Revise the second and third paragraphs to read:

Accordingly, the Contractor agrees:

1. To pay (according to the following formula) liquidated damages for each working day beyond the number of working days established for Physical Completion, and

2. To authorize the Engineer to deduct these liquidated damages from any money due or coming due to the Contractor.

Liquidated Damages Formula

LD=0.15C/T

Where:

LD = liquidated damages per working day (rounded to the nearest dollar)
C = original Contract amount
T = original time for Physical Completion

When the Contract Work has progressed to Substantial Completion as defined in the Contract, the Engineer may determine the Contract Work is Substantially Complete. The Engineer will notify the Contractor in writing of the Substantial Completion Date. For overruns in Contract time occurring after the date so established, the formula for liquidated damages shown above will not apply. For overruns in Contract time occurring after the Substantial Completion Date, liquidated damages shall be assessed on the basis of direct engineering and related costs assignable to the project until the actual Physical Completion Date of all the Contract Work. The Contractor shall complete the remaining Work as promptly as possible. Upon request by the Project Engineer, the Contractor shall furnish a written schedule for completing the physical Work on the Contract.

END OF SECTION

1-09 MEASUREMENT AND PAYMENT

1-09.2(1) General Requirements for Weighing Equipment
(December 30, 2022 APWA GSP, Option 2)

Revise item 4 of the fifth paragraph to read:

4. Test results and scale weight records for each day's hauling operations are provided to the Engineer daily. Reporting shall utilize WSDOT form 422-027, Scaleman's Daily Report, unless the printed ticket contains the same information that is on the Scaleman's Daily Report Form. The scale operator must provide AM and/or PM tare weights for each truck on the printed ticket.

1-09.6 Force Account
(December 30, 2022 APWA GSP)

Supplement this section with the following:

The Contracting Agency has estimated and included in the Proposal, dollar amounts for all items to be paid per force account, only to provide a common proposal for Bidders. All such dollar amounts are to become a part of Contractor's total bid. However, the Contracting Agency does not warrant expressly or by implication, that the actual amount of work will correspond with those estimates. Payment will be made on the basis of the amount of work actually authorized by the Engineer

(January 13, 2011 Tacoma GSP)
Item #3 of this Section is supplemented with the following:

The Contractor shall submit a comprehensive summary list of all equipment anticipated to be used on the project and their associated AGC/WSDOT Equipment Rental Rates. The list shall include the contractor's equipment number, make, model, year, operation rate, standby rate, applicable attachments and any other applicable information necessary to determine the applicable rates in accordance with this section. In addition, the contractor shall submit an Equipment Watch rate sheet (www.equipmentwatch.com) for each piece of equipment in the summary list. Access to the Equipment Watch web site is available at the City's Construction Management Office.

1-09.9 Payments
(March 13, 2012 APWA GSP)

Delete the first four paragraphs and replace them with the following:

The basis of payment will be the actual quantities of Work performed according to the Contract and as specified for payment.

The Contractor shall submit a breakdown of the cost of lump sum bid items at the Preconstruction Conference, to enable the Project Engineer to determine the Work performed on a monthly basis. A breakdown is not required for lump sum items that include a basis for incremental payments as part of the respective Specification. Absent a lump sum breakdown, the Project Engineer will make a determination based on

information available. The Project Engineer's determination of the cost of work shall be final.

Progress payments for completed work and material on hand will be based upon progress estimates prepared by the Engineer. A progress estimate cutoff date will be established at the preconstruction conference.

The initial progress estimate will be made not later than 30 days after the Contractor commences the work, and successive progress estimates will be made every month thereafter until the Completion Date. Progress estimates made during progress of the work are tentative, and made only for the purpose of determining progress payments. The progress estimates are subject to change at any time prior to the calculation of the final payment.

The value of the progress estimate will be the sum of the following:

1. Unit Price Items in the Bid Form — the approximate quantity of acceptable units of work completed multiplied by the unit price.
2. Lump Sum Items in the Bid Form — based on the approved Contractor's lump sum breakdown for that item, or absent such a breakdown, based on the Engineer's determination.
3. Materials on Hand — 100 percent of invoiced cost of material delivered to Job site or other storage area approved by the Engineer.
4. Change Orders — entitlement for approved extra cost or completed extra work as determined by the Engineer.

Progress payments will be made in accordance with the progress estimate less:

1. Retainage per Section 1-09.9(1), on non FHWA-funded projects;
2. The amount of progress payments previously made; and
3. Funds withheld by the Contracting Agency for disbursement in accordance with the Contract Documents.

Progress payments for work performed shall not be evidence of acceptable performance or an admission by the Contracting Agency that any work has been satisfactorily completed. The determination of payments under the contract will be final in accordance with Section 1-05.1.

This section is supplemented with the following:
(January 6, 2015 Tacoma GSP)

Breakdowns of all lump sum items shall be provided for all lump sum items and shall include all costs for labor, equipment, materials, and taxes (as applicable) associated with the lump sum item. Washington State Department of Revenue Rules 170 and 171 apply to lump sum items per Section 1-07.2 of the WSDOT State Amendments to the Standard Specifications.

Stockpiled Material - The point of acceptance of stockpiled material for payment and quality shall be at the time of incorporation into the contract.

1-09.9(1) Retainage
(May 10, 2006 Tacoma GSP)
The fourth paragraph is supplemented with the following:

6. A "General Release to the City of Tacoma" is on file with the Contracting Agency.
7. A release has been obtained from the City of Tacoma's City Clerk's Office.

1-09.13(3)A Arbitration General
(January 19, 2022 APWA GSP)

Revise the third paragraph to read:

The Contracting Agency and the Contractor mutually agree to be bound by the decision of the arbitrator, and judgment upon the award rendered by the arbitrator may be entered in the Superior Court of the county in which the Contracting Agency's headquarters is located, provided that where claims subject to arbitration are asserted against a county, RCW 36.01.050 shall control venue and jurisdiction of the Superior Court. The decision of the arbitrator and the specific basis for the decision shall be in writing. The arbitrator shall use the Contract as a basis for decisions.

END OF SECTION

1-10 TEMPORARY TRAFFIC CONTROL

1-10.1 General
(April 7, 2014, WSDOT GSP)
This section is supplemented with the following:

Temporary Pedestrian Access
(******)
All pedestrian access paths shall be maintained per Proposed Accessibility Guidelines for Pedestrian Facilities in the Public Right-of-Way (PROWAG) and Specification Sections 1-07.23, and 1-10. The Contractor shall submit the proposed material type for "Temporary Pedestrian Access" to the Engineer for approval prior to construction. The Contractor shall maintain each pedestrian access and make repairs as directed for the duration of the construction, until the sidewalk and entry ways are finished at each respective location.

1-10.1(2) Description
(******)
The first sentence of the second paragraph is revised to read:

The Contractor shall keep lanes, open to traffic at all times except when Work requires closure(s) that have been requested and approved in accordance with section 1-10.2(2).

The third sentence of the second paragraph is revised to read:

Approved lane closures shall be for the minimum time required to complete the Work.

This section is supplemented with the following:

Only uniformed off-duty police officers shall be used to control traffic when it is necessary to override or provide traffic control at signalized intersections. Off-duty City of Tacoma Police Department officers are preferred within the jurisdiction of the Tacoma PD, and the Contractor shall grant the Tacoma PD the "first right of refusal" by contacting the Tacoma PD first as stated below.

The City will make all necessary temporary adjustments to existing traffic signals and traffic signal activators.

Existing signs shall not be removed until the Contractor has provided for temporary measures sufficient to safeguard and direct traffic after existing signs have been removed. Preservation of temporary traffic control and street name signs shall be the sole responsibility of the Contractor.

As the work progresses and permits, temporarily relocated and/or removed traffic signs shall be reset in their permanent location. Permanent signs and other traffic control devices damaged or lost by the Contractor shall be replaced or repaired at the Contractor's expense.

1-10.2 Traffic Control Management
1-10.2(1) General
(October 3, 2022, WSDOT GSP)
Section 1-10.2(1) is supplemented with the following:

The Traffic Control Supervisor shall be certified by one of the following:

The Northwest Laborers-Employers Training Trust
27055 Ohio Ave.
Kingston, WA 98346
(360) 297-3035
https://www.nwlett.edu

Evergreen Safety Council
12545 135th Ave. NE
Kirkland, WA 98034-8709
1-800-521-0778
https://www.esc.org

The American Traffic Safety Services Association
15 Riverside Parkway, Suite 100
Fredericksburg, Virginia 22406-1022
Training Dept. Toll Free (877) 642-4637
Phone: (540) 368-1701
https://altssa.com/training

Integrity Safety
13912 NE 20th Ave.
Vancouver WA 98686
(360) 574-6071
https://www.integritysafety.com

US Safety Alliance
(904) 705-5660
https://www.ussafetyalliance.com

K&D Services Inc.
2719 Rockefeller Ave. Everett, WA 98201
(800) 343-4049
https://www.kndservices.net

1-10.3 Traffic Control Labor, Procedures, and Devices

1-10.3(1) Traffic Control Labor
(******)

The first paragraph is revised to read:

The Contractor shall furnish all personnel for flagging and spotting, for the execution of all procedures related to temporary traffic control and for the setup, maintenance and removal

of all temporary traffic control devices and construction signs necessary to control vehicular, bicycle, and pedestrian traffic during construction operations.

1-10.3(1)A Flaggers
This heading is revised to read:

1-10.3(1)A Flaggers and Spotters
(******)

This section is supplemented with the following:

The Contractor shall provide a spotter where needed and when indicated on the plans and/or with these Specifications. The spotters sole duties are as follows: the spotter shall walk ahead of the construction vehicle in the direction of vehicle travel to insure no student, school employee, school visitors, or other pedestrians are in the path of vehicle travel, as well as exclusively assisting with the navigation of pedestrians through, around, adjacent to, and/or through the work zone or adjoining traffic control areas as indicated in the traffic control plans or as directed to do so on-site. In the course of these responsibilities, the spotter shall signal the vehicle to stop should a student, school employee, visitor, or other pedestrian be in the immediate path of the vehicle. The vehicle shall remain stopped under the direction of the spotter until all pedestrians are out of the immediate path of the vehicle.

1-10.3(1)B Other Traffic Control Labor
(******)

The first sentence is revised to read:

In addition to flagging duties, the Contractor shall provide personnel for all other traffic control procedures required by the construction operations and for the labor and equipment to install, maintain, and remove any traffic control devices shown on Traffic Control Plans.

1-10.3(2) Traffic Control Procedures
Section 1-10.3(2) is supplemented with the following:

1-10.3(2)F Signalized Intersections
(******)

When construction operations are such that an existing traffic signal is required to be overridden to allow for traffic control measures, the signal shall be overridden only by a uniformed off-duty police officer. Use of uniformed off-duty police officers shall be used only when approved by the City.

All off-duty officers shall be commissioned within the State of Washington.

Tacoma Police Department officers shall be the first choice for traffic control that overrides any traffic signal within the jurisdiction of the City of Tacoma PD. The Contractor shall first contact Tacoma Police Department, Special Events Sergeant

(contact information below), to schedule police officers for the specified traffic control duty.

Tacoma Police Department
Special Events Sergeant
(253) 591-5932
TacomaPoliceEvents@ci.tacoma.wa.us

All costs associated with the use of uniformed off-duty police officers shall be included in the lump sum price for, “Project Temporary Traffic Control”.

The Contractor shall request officers at least 48 hours in advance for scheduling, unless an exception is approved by the Engineer.

The Contractor shall immediately notify the Engineer in writing if Tacoma PD cannot supply officers for the requested date(s). The Contractor shall include the written response from Tacoma PD and state the preference to either postpone the affected Work or request officers from other State of Washington jurisdictions. Using officers from other jurisdictions must be approved by the Engineer.

The Contractor will not be compensated for any off-duty officers from other jurisdictions performing traffic control without prior approval from the Engineer, and the Contracting Agency may stop work in accordance with Section 1-08.6, “Suspension of Work”.

1-10.3(3)A Construction Signs
(******)
The last paragraph is revised to read:

Signs, posts, or supports that are lost, stolen, damaged, destroyed, or which the Engineer deems to be unacceptable while their use is required on the project shall be replaced by the Contractor at their expense.

1-10.3(3)C Portable Changeable Message Sign
(August 4, 2010 Tacoma GSP)
This section is supplemented with the following:

Portable Changeable Message Signs shall be required on arterials streets where construction occurs for durations longer than seven (7) calendar days. Signs shall be solar charged and programmable. Signs shall be provided a minimum of seven (7) calendar days prior to construction and remain through the duration of the construction on the arterial street. Signs shall be provided on each end of the arterial street construction zone notifying oncoming traffic of the construction conditions. All costs associated with providing and maintain the signs for the required duration shall be included in the proposal item, “Project Temporary Traffic Control”, per lump sum

(******)
To prevent hackers from getting access to the Portable Change Message Signs (PCMS), the contractor is required to change the default password and to take other appropriate measures for field access to message control features on the PCMS. In addition, the contractor shall verify the PCMS control box, if any, is secured and locked

from tampering during the daily review of the work zone set up and conditions of the traffic control devices.

1-10.4(2) Item Bids with Lump Sum for Incidentals
(January 11, 2006 Tacoma GSP)
This section is supplemented with the following:

No unit of measure will apply to the position of traffic control manager and it will be considered included in other unit contract prices in the Bid Proposal.

The bid proposal contains the item “Project Temporary Traffic Control”, lump sum and the additional temporary traffic control items listed below. The provisions of Section 1-10.4(1), Section 1-10.4(3), and Section 1-10.5(3) shall apply.

***
“Pedestrian Traffic Control”, per lump sum

***

1-10.5 Payment

1-10.5(2) Item Bids with Lump Sum for Incidentals
(******)
This section is supplemented with the following:

The Bid Item “Pedestrian Traffic Control” is supplemented with the following:

All costs incurred for “Spotter” shall be included in the price per lump sum for “Pedestrian Traffic Control”, according to Section 1-10.

END OF SECTION

2-01 CLEARING, GRUBBING, AND ROADSIDE CLEANUP (******)

2-01.1 Description

This section is revised to read:

The Contractor grub the existing grass within the area of ground disturbance in accordance with the Plans and Specifications and as needed to complete the Contract Work. For this project clearing and grubbing only includes removal of existing grass.

2-01.2 Disposal of Usable Material and Debris

The second paragraph is revised to read:

The Contractor shall dispose of all debris in accordance with Section 2-01.2(2).

2-01.2(2) Disposal Method No. 2 – Waste Site

This section is supplemented with the following:

Soil and grass excavated by grubbing shall be included in the measurements and payments for "Roadway Excavation - CID Contaminated, Incl. Haul" in accordance with Section 2-03, Roadway Excavation and Embankment.

The Contractor shall haul and dispose of all soil material excavated from the Project site in accordance with Special Provisions Sections 2-03 and 2-17.

The Contractor shall haul and dispose of all contaminated soil material excavated from the Project site in accordance with the Contract, Plans, and Specifications to LRI Landfill, located at 30919 Meridian Street East, Graham, WA 98338 in accordance with Special Provisions Section 2-17. <u>The Contractor shall not include the cost of the disposal fees in the bid item. The City of Tacoma will pay the disposal fees directly to LRI.</u>

2-01.3(2) Grubbing

Item 1. is supplemented with the following:

All soil and grass removed through this Work shall be included in the measurement and payment for "Roadway Excavation - CID Contaminated, Incl. Haul", per cubic yard, in accordance with Section 2-03, Roadway Excavation and Embankment , and in accordance with Special Provisions Section 2-17, Control and Management of Contaminated Materials.

2-01.4 Measurement

This section is supplemented with the following:

The measurement for removal and disposal of soil shall be included in "Roadway Excavation - CID Contaminated, Incl. Haul, per cubic yard" in accordance with Section 2-03.4, Measurement.

2-01.5 Payment

This section is revised to read:

All costs for the removal and disposal of grass and soil shall be included in the unit Contract prices for “Roadway Excavation - CID Contaminated, Incl. Haul, per cubic yard”, per cubic yard in accordance with Section 2-03.5, Payment.

END OF SECTION

2-02 REMOVAL OF STRUCTURES AND OBSTRUCTIONS (******)

2-02.1 Description

The first sentence of the first paragraph is revised to read:

The Work described in this section includes removing and disposing of, or salvaging, relocating, materials and features or appurtenances as shown on the contract Plans and according to the Specifications.

The Work also includes performing utility location through test holes according to these special provisions, for determining the location and depth of existing utilities or structures.

Backfilling of trenches, holes, or pits resulting from this Work is included.

2-02.2 Materials

This section is revised to read:

Materials shall include all material or equipment needed to excavate, remove, shore, salvage and store, and to replace existing material.

2-02.3 Construction Requirements

The first sentence of the first paragraph is revised to read:

As shown per Plans and in these Special Provisions, the Contractor shall relocate or raze, remove, and dispose of all underground structures and utilities, signs, fences, landscaping walls, extruded curbs, rubble, rocks and boulders, and any other obstructions that form an obstacle to construction.

This section is supplemented with the following:

The Contractor shall haul and dispose of all soil material excavated from the Project site in accordance with Special Provisions Sections 2-03 and 2-17.

The Contractor shall haul and dispose of all contaminated soil material excavated from the Project site in accordance with the Contract, Plans, and Specifications to LRI Landfill, located at 30919 Meridian Street East, Graham, WA 98338 in accordance with Special Provisions Section 2-17. <u>The Contractor shall not include the cost of the disposal fees in the bid item. The City of Tacoma will pay the disposal fees directly to LRI.</u>

Existing Traffic Signs

Any traffic signs and parking signs that exist in the work area shall be salvaged and replaced as directed by the Engineer.

Test Holes

The engineer may at certain locations on the project site need to discover or locate an existing utility or structure that does not have proper as-built information. The contractor shall excavate a small test hole, where directed by the engineer, in determining the location and depth of the existing utility or structure.

The test hole may be excavated by conventional excavation methods or by the use of a vacuum truck. The test hole for the conventional method shall be a minimum of 48” by 48” in width. The test hole shall be no deeper than 17 feet in depth. Gravel borrow shall be used to backfill the excavated hole. The gravel borrow shall be compacted in accordance to section 2-09 of the standard specifications. Three inches minimum of asphalt patch shall be placed on top of the gravel borrow to provide a temporary driving surface in a travel lane.

2-02.3(3) Removal of Pavement, Sidewalks, and Curbs
This section is deleted.

2-02.4 Measurement

Measurement of the test hole shall be measured per linear foot from the surface of the existing ground to the bottom of the excavated test hole.

2-02.5 Payment
This section is revised to read:

(******)

All costs for the removal and disposal of soil shall be included in the unit Contract prices for “Roadway Excavation ____Incl. Haul”, per cubic yard in accordance with Section 2-03.5, Payment.

Payment will be made in accordance with Section 1-04.1, for the following Bid items when they are included in the Proposal:

Any relocation, salvage, demolition and removal work according to these specifications shall be included in other bid items.

“Test Hole”, per linear foot

The unit contract price per linear foot for “Test Hole” shall be full pay for all labor, equipment, and materials required to perform potholing, complete and close the test hole, and construct a temporary pavement patch in accordance with these specifications.

END OF SECTION

2-03 ROADWAY EXCAVATION AND EMBANKMENT
(******)

2-03.1 Description
The last sentence of the first paragraph is deleted.

2-03.3 Construction Requirements
This section is supplemented with the following:

All roadway excavation shall be handled, hauled, and disposed of as contained-in determination (CID) contaminated material. The Contractor shall haul and dispose of all contaminated soil material excavated from the Project site in accordance with the Contract, Plans, and Specifications to LRI Landfill, located at 30919 Meridian Street East, Graham, WA 98338 in accordance with Special Provisions Section 2-17. The Contractor shall not include the cost of the disposal fees in the bid item. The City of Tacoma will pay the disposal fees directly to LRI.

All soil from roadway excavation activities will be disposed of off site and shall be considered unsuitable fill material.

2-03.3(5) Slope Treatment
This section is deleted.

2-03.3(19) Removal of Pavement, Sidewalks, Curbs, and Gutters
This section is deleted.

Section 2-03.3 is supplemented with the following:

2-03.3(20) Field Adjustment
(******)

Field adjustment involves adjustments to horizontal or vertical alignments, or vault elevations, that are shown in the plans or directed by the Engineer and will be performed as needed, by the Contractor, to address issues with drainage, street crowning, cross slopes, curb ramps, and connections to existing grades for the finished product. The Contractor and the Engineer shall collaborate on field adjustment. All grade checking needed to complete the field adjustments shall be provided by the Contractor. The Contractor shall continue work, during the field adjustment time, in unaffected areas of the Project, in accordance with the Plans and Specifications. Some localized delay is inherent in this process, and the contractor shall be prepared to collaborate and move crews on to other work locations. For each field adjustment the City of Tacoma shall pay the Contractor by Force Account in accordance with Section 1-09.6. The contractor shall not be entitled to additional compensation due to delays from field adjustments.

2-03.5 Payment
This section is supplemented with the following:

“Roadway Excavation - CID Contaminated, Incl. Haul”, per cubic yard.

The unit Contract price per cubic yard for “Roadway Excavation - CID Contaminated, Incl. Haul” shall be full compensation for all costs incurred for excavating, loading, disposal and haul of contained-in determination (CID) contaminated material to LRI Landfill. The Contractor shall not include the cost of the disposal fees in the bid item. The City of Tacoma will pay the cost of the disposal fees directly to LRI.

“Unsuitable Foundation Excavation - CID Contaminated, Incl. Haul”, per cubic yard

The unit Contract price per cubic yard for “Unsuitable Foundation Excavation - CID Contaminated, Incl. Haul” shall be full compensation for all costs incurred for excavating below subgrade per Section 2-03.3(14)E, loading, disposal and haul of contained-in determination (CID) contaminated material to LRI Landfill. The Contractor shall not include the cost of the disposal fees in the bid item. The City of Tacoma will pay the cost of the disposal fees directly to LRI.

“Field Adjustment”, by Force Account

END OF SECTION

2-06 SUBGRADE PREPARATION
(******)

2-06.3 Construction Requirements
This section is supplemented with the following:

Subgrade Repair for Subgrade Not Constructed Under Same Contract
Upon removal of pavement, the Contractor and City Inspector shall walk the subgrade surface to determine and delineate any subgrade areas that need to be repaired. Any Subgrade areas that require repair, from the initial walkthrough, shall be determined solely by the City Inspector. Any initial subgrade repairs shall be paid for according to Section 2-06.5(2). Subgrade repair shall be performed in accordance with Section 2-06 and immediately after it has been determined and delineated. In order to minimize damage to the subgrade, the Contractor is encouraged to minimize pavement removal during the work.

Subgrade Maintenance and Protection
Immediately after the contractor constructs the subgrade or completes initial subgrade repair to the City's satisfaction, the contractor shall maintain and protect the subgrade. Any defects or damage of the subgrade thereafter shall be repaired or replaced according to Section 2-06, at the Contractor's expense before placement of any succeeding courses or pavement. Maintenance and protection of the subgrade shall be the responsibility of the Contractor. The Contractor shall be required to take precautionary measures to prevent damage by heavy loads or equipment, as well as from inclement weather.

The Contractor and City Inspector should walk the exposed subgrade on a daily basis to determine if there is damage to the subgrade. Any Subgrade areas that require repair according to this section shall be determined solely by the City Inspector.

2-06.5 Measurement and Payment
This section is supplemented with the following:

Subgrade Maintenance and Protection shall be paid by lump sum and shall apply to all subgrade.

"Subgrade Maintenance and Protection", lump sum

The lump sum price for "Subgrade Maintenance and Protection" shall be full pay for all material, labor, and equipment for implementation of subgrade maintenance and protection, as determined by the City Inspector.

If the contractor fails to protect the subgrade so that additional subgrade repairs are required as determined by the City Inspector, then the city shall not owe payment for these additional subgrade repairs in accordance with Section 2-06.3.

2-06.5(2) Subgrade Not Constructed Under Same Contract
Item 4 under this section is revised to read:

- **Excavation and Backfill** – If the Engineer directs the Contractor to excavate unsuitable or unstable subgrade soil, then the City of Tacoma will measure and

pay for the Work as “Roadway Excavation - CID Contaminated, Incl. Haul”. The City of Tacoma will pay unit Contract prices for suitable backfill material that are included in the Bid Proposal or per Section 1-04.4, Changes.

Item 5 under this section is deleted.

END OF SECTION

2-07 WATERING
(August 3, 2009 Tacoma GSP)

2-07.3 Construction Requirements
The last sentence of the first paragraph is revised to read:

The Engineer may direct that the Contractor apply water during non-working hours such as evenings, weekends, or recognized holidays.

Section 2-07.3 is supplemented with the following:

2-07.3(1) Water Supplied from Hydrants

There is no guarantee that all fire hydrants will be available for use for cleaning, lining, or any other construction activities associated with this project. Prior to construction activities, it shall be the Contractor's responsibility to verify which hydrants will be available by contacting Tacoma Water. The Contractor shall use only those hydrants designated by Tacoma Water.

Water supplied from hydrants governed by Tacoma Water shall be used in strict compliance with the "Operating Procedures for the use of Water Division Hydrants" available at the Tacoma Water Permit Counter.

The Contractor shall obtain a Hydrant Permit prior to start of work by contacting the Water Permit Counter at (253) 502-8247, 2nd floor, Tacoma Public Utilities, Administrative Building, 3628 South 35th Street, Tacoma, WA 98409. A copy of the approved Hydrant Permit shall be submitted to the Engineer.

Contractor personnel shall be in possession of a valid Tacoma Public Utilities Hydrant Certification Card prior to obtaining a permit. If necessary, contractor personnel shall undergo training to receive the required certification. Contact the Water Permit Counter to set up training as necessary.

END OF SECTION

2-09 STRUCTURE EXCAVATION

(******)

2-09.1 Description

This section is supplemented with the following:

The Work for Structure Excavation Class B shall include the excavation of the utility trenches, stock piling, loading, haul, and disposal of all excavated material. ”Utility trenches” shall include but not be limited to Storm Sewer and Sanitary Sewer, conduit trenches, power duct-bank trenches, water utility or joint use utility trenches, and as shown on the Plans.

2-09.3(1)D Disposal of Excavated Material

This section is supplemented with the following:

All material excavated from the trench shall be considered <u>Contained-in-Determination (CID) Contaminated</u> and unsuitable for backfill and shall be removed and replaced with Crushed Surfacing Top Course (CSTC), and in accordance with the Plans.

The Contractor shall haul and dispose of all contaminated soil material excavated from the Project site in accordance with the Contract, Plans, and Specifications to LRI Landfill, located at 30919 Meridian Street East, Graham, WA 98338 in accordance with Special Provisions Section 2-17. <u>The Contractor shall not include the cost of the disposal fees in the bid item. The City of Tacoma will pay the disposal fees directly to LRI.</u>

2-09.3(4) Construction Requirements, Structure Excavation, Class B

This section is supplemented with the following:

(******)
The Contractor shall load structure excavation material directly in dump trucks or water tight containers for disposal in accordance with Special Provisions Section 2-17. The contractor shall not store or re-use any excavated material on the Project site, and shall haul and dispose of it in accordance with these Specifications.

Dewatering shall be in accordance with Special Provisions Section 8-01.

Backfilling power duct bank trenches shall be in accordance with Special Provisions Section 8-40.

<u>Extra Excavation Class B:</u>

Extra Excavation on this project involves adding <u>CID contaminated soil</u> quantities to <u>the project specific CID authorization letter issued by the Washington State Department of Ecology (DOE) and a Waste Disposal Authorization (WDA) issued by the Tacoma Pierce County Health Department (TPCHD).</u> Therefore, the quantity of Extra Excavation shall be calculated separately as specified in 2-09.4. Extra Excavation, Haul and Disposal will be subject to regulations for CID Contaminated Soil and Section 2-17, and potentially includes contaminated dewatering in accordance with Section 8-01.

The Contractor may submit a working plan for Extra Excavation and Shoring and the Contractor shall not start this Work until the Engineer has approved the Extra Excavation plan in writing. The Extra Excavation Plan shall include the calculated in place volume of the proposed Extra Excavation and show the limits of excavation. The City of Tacoma shall not be required to grant approval of any Extra Excavation. Before approval of the Extra Excavation, the City of Tacoma shall obtain DOE permission for an increase in the CID Contamined Soil quantity if necessary. Regardless of time spent by DOE and TPCHD to review and approve of any quantity increase, the Contractor shall not charge the City of Tacoma for any delays related to review and approval of the quantity increase resulting from Extra Excavation. The City will accept extra excavation resulting from accidental trench wall sloughing or collapse, and in that case the quantity will be tracked separately from structure excavation class B and the WDA may also need to be revised for an increase.

2-09.4 Measurement

This section is supplemented with the following:

Longitudinal Limits Class B: For all storm and sanitary sewers, the longitudinal measurement will be from center of manhole to center of manhole or to the inside face of catch basins and similar type structures.

Upper Limits Class B: The upper limits for “Structure Excavation Class B, Incl. Haul ____” shall be the subgrade elevation of the proposed roadway section or pavement patch section.

All costs associated with the disposal of material located above the upper limits shall be included in the unit Contract price for “Roadway Excavation ___ Incl. Haul” per Special Provisions Section 2-03, Roadway Excavation and Embankment.

Pipe zone limits are as defined in Standard Plan SU-16.

The measurement for the excavation required for ductbanks, power vaults, conduits, and other utility structures shall be included in the measurement for “Structure Excavation Class B Inc. Haul – Contaminated CID”, per cubic yard.

Structure Excavation limits for power utilities are governed by Section 8-40.

The measurement for “Shoring or Extra Excavation Class B” is revised to read:

“Shoring Class B” shall be measured per square foot of vertical plane through the center of the actual structure excavation performed from the exposed top surface to the bottom of excavation.

Extra Excavation Class B shall be measured in its original position by the cubic yard. Extra Excavation Class B shall be measured and tracked separately, separate from structure excavation class B. As this quantity is uncertain at the time of bid, the City has entered a quantity in the Proposal to serve as a common basis of bid.

2-09.5 Payment

(******)

This section is supplemented with the following:

"Structure Excavation Class B Incl. Haul – Contaminated CID", per cubic yard.

The unit Contract price for "Structure Excavation Class B Incl. Haul – Contaminated CID" shall be full payment for all contaminated structure excavation for ductbanks, power vaults, conduits, and other utility structures within the Project limits, and all other Work necessary for the construction of the utility trench and other utility structures not specifically covered in other bid items; and for haul and disposal to LRI Landfill. The Contractor shall not include the cost of the disposal fees in the bid item. The City of Tacoma will pay the cost of the disposal fees directly to LRI.

The pay item "Removal and Replacement of Unsuitable Material" is deleted and is covered by "Structure Excavation Class B__" and "Crushed Surfacing Top Course" in Sections 2-09.5 and 4-04.5.

The payment item "Shoring or Extra Excavation Class B" is revised to read:

"Shoring Class B", per square foot

The unit contract price per square foot for "Shoring Class B" shall be full compensation for submitting shoring working drawings, furnishing and installing shoring in accordance with these Specifications, including maintenance and removal of shoring.

"Extra Excavation Class B, CID Contaminated", per cubic yard

The Unit Contract price per cubic yard for "Extra Excavation Class B, CID Contaminated" shall be full compensation to excavate, load and haul the material to LRI and dispose the material under a revised WDA. The Contractor shall not include the cost of the disposal fees in the bid item. The City of Tacoma will pay the cost of the disposal fees directly to LRI.

END OF SECTION

2-14 PAVEMENT REMOVAL
(******)

2-14.1 Description

The Work described in this section includes the removal and disposal of pavement surfaces identified on the Plans or as marked in the field.

2-14.2 Pavement Classification

Removal of pavement is defined below by type and class based on composition and thickness:

Type I Pavement removal where all or portions of the existing pavement is being removed in conjunction with street construction or any other removal not described below for Type II or Type III.

Type II Pavement removal required for the placing of utilities at greater and varying depths, such as sewers.

Type III Pavement removal required for narrow and shallow utility cuts in order to install light cables, conduits and similar shallow utilities.

Class A2 Class A2 pavement removal shall apply to the removal of asphalt concrete, bituminous road surfacing, multiple lift bituminous surface treatments or any combination of these components having an average thickness of two inches or less.

Class A8 Class A8 pavement removal shall apply to the removal of asphalt concrete, bituminous road surfacing, multiple lift bituminous surface treatments or any combination of these components having an average thickness between four inches and eight inches.

Class A12 Class A12 pavement removal shall apply to the removal of asphalt concrete, bituminous road surfacing, multiple lift bituminous surface treatments or any combination of these components having an average thickness between four inches and twelve inches.

Class C6 Class C6 pavement removal shall apply to all non-reinforced cement concrete pavements or slabs having an average thickness of six inches or less, typical for existing sidewalk and residential driveway entrances. After the curbs and pavement have been constructed, the Contractor may be required to remove additional sidewalk necessary to provide proper connections and grades, as determined by the Engineer.

Class C12 Class C12 pavement removal shall apply to all cement concrete pavements or slabs having an average thickness of between six inches and twelve inches, typical for concrete road pavement and some commercial driveways.

Class CA Class CA pavement removal shall apply to all pavements that have a wearing surface of asphalt concrete upon a cement concrete pavement or, cement concrete base, and for which the total combined thickness of the pavement averages between six inches and twelve inches.

Class H Class H pavement removal shall apply to early type pavement of a cement concrete base with a brick or cobblestone surface and potentially an additional layer of asphalt concrete pavement for which the total combined thickness of the pavement averages between six inches and twelve inches.

2-14.3 Construction Requirements

All final meetlines shall be sawcut. All pavement removal shall be Type I removal unless the Type is otherwise specified.

Where monolithic cement concrete pavement and curb are being removed, the curb removal shall be considered as pavement removal, and the measurement for payment will be to the back of the curb.

The removal of existing street improvements shall be conducted in such a manner as not to damage utilities and any portion of the improvement that is to remain in place. Any deviation in this matter will obligate the Contractor, at no expense to the City of Tacoma, to repair, replace, or otherwise make proper restoration to the satisfaction of the Engineer.

2-14.4 Measurement

Pavement removal will be measured per square yard.

Type I pavement removal will be measured in its original position through the use of survey techniques.

2-14.5 Payment

Payment will be made in accordance with Section 1-04.1.

All costs associated with saw cutting meet lines shall be included in the unit Contract price for pavement removal.

“Remove Existing Pavement, Type I, Class CA”, per square yard

The unit price per square yard for “Remove Existing Pavement, Type I, Class CA” shall be full compensation for removal of this pavement class and any other classes of pavement removal that are not specifically included in the bid proposal, including haul and disposal in accordance with the Plans and these Specifications.

Remove Existing Pavement, Type I, Class C6, per square yard

The unit price per square yard for “Remove Existing Pavement, Type I, Class C6” shall be full compensation for removal of this pavement class, including haul and disposal in accordance with the Plans and these Specifications.

END OF SECTION

2-15 CURB AND CURB AND GUTTER REMOVAL (******)

2-15.1 Description

The Work described in this section includes the complete removal and disposal of curbs and curb and gutter identified on the Plans or as marked in the field.

2-15.2 Curb Classification

Integral Curb - Integral curb shall consist of curb that is constructed monolithic with the adjacent cement concrete pavement.

Curb - Curb may consist of cement concrete curb, granite curb, or any other combination of rigid material that extends below the pavement surface elevation.

Extruded/Precast Curb - Extruded or precast curb may consist of asphalt or concrete extruded or precast curb that is installed on a pavement surface.

Curb and Gutter - Curb and gutter may be cement concrete, or a cement concrete curb with a brick gutter on a cement concrete base, or other combination of rigid material.

2-15.3 Construction Requirements

Integral curb removal shall consist of the removal of the curb and the integral base section under the curb. The removal shall be accomplished by sawcutting along the face of the curb.

The removal of the curb and/or curb and gutter shall be conducted in such a manner as not to damage utilities and any portion of the improvement that is to remain in place. Any deviation in this matter will obligate the Contractor, at no expense to the City of Tacoma, to repair, replace, or otherwise make proper restoration to the satisfaction of the Engineer.

2-15.4 Measurement

Curb and curb and gutter removal will be measured per linear foot.

2-15.5 Payment

Payment will be made in accordance with Section 1-04.1.

“Remove Curb”, per linear foot.

The unit Contract price per linear foot for “Remove Curb” shall be full pay for all labor, material, and equipment required for the removal and disposal of all existing curb types, such as extruded curb, integral curb, curb, curb and gutter as specified in this section. All saw cutting, wheel trenching, hydro hammering, chipping, grinding, and all other work necessary for the removal of curb or curb and gutter shall be included in the unit Contract price for “Remove Curb”.

END OF SECTION

2-17 CONTROL AND MANAGEMENT OF CONTAMINATED MATERIALS (******)

2-17.1 Description

This section specifies contaminated excavated material handling, transport and disposal requirements.

2-17.1(1) General

Contaminated soils exceeding the levels listed in the Washington State Models Toxics Control Act (MTCA) cleanup regulations (Chapter 173-340 WAC) have been encountered on the Project site. The Contractor shall operate within and meet all applicable laws and regulations associated with working with regulated materials encountered during excavation activities. The Contractor is notified of the existence of cleanup standards for site soils developed according to MTCA.

The Contractor is advised to review the applicable Washington Administrative Codes (WAC), Washington Department of Ecology (DOE), Washington State Department of Health (DOH), MTCA and Asarco Reports.

Websites for further information:

WAC: http://apps.leg.wa.gov/wac/ (Title 173-303 & 173-340)

DOH: http://www.doh.wa.gov/

DOE: http://www.ecy.wa.gov/ and https://ecology.wa.gov/Regulations-Permits/Guidance-technical-assistance/Contained-in-determinations

Public Health Seattle and King County:
http://www.kingcounty.gov/healthservices/health/ehs/toxic/ArsenicLead.aspx

Pierce County Health Department:
http://www.tpchd.org/index.php

Environmental Protection Agency, Asarco Smelter Cleanup:
http://www.epa.gov/region10

Agency for Toxics Substances and Disease Registry, Facts on Arsenic:
http://www.atsdr.cdc.gov/tfacts2.html

Centers for Disease Control, Facts on Lead:
http://www.cdc.gov/nceh/lead/publications/1997/factlead.htm

Department of Health, Drinking Water:
http://www.doh.wa.gov/ehp/dw

2-17.1(2) Soil Management

Contaminated Material Requiring a Contained-In-Determination(CID):
The Contractor shall load all material directly into trucks and dispose of it as CID contaminated material at LRI Landfill (Subtitle D), located at 30919 Meridian Street East, Graham, WA. Saturated excavated material shall first be drained and decanted. Transportation shall be in accordance with Section 2-17.3(2).

A copy of the 'contained-in determination' from DOE is included in the Appendix of these Special Provisions. The City of Tacoma will obtain a WDA from TPCHD for disposal of all CID contaminated material at the LRI Landfill. The Contractor shall follow all provisions of the WDA and the contained in determination. The City of Tacoma will pay the disposal (tipping) fee directly to LRI for disposal of this material. *The Contractor shall not include the LRI Disposal Fee in their bid items.*

2-17.1(3) Submittals

This paragraph lists submittals required for this project area. Other submittals will be as required.

1. **Health and Safety Plan** – Section 2-17.2(2).
2. **Resume of Site Health and Safety Officer** – Section 2-17.2(3).
3. **Manifest Package and Supporting Analytical Data** – Section 2-17.3(2)D
4. **Soil Management Plan** – Section 2-17.2(5)
5. **Contractor and/or Subcontractor Environmental Qualifications**

2-17.2 Health and Safety

The Contractor shall be responsible for the health and safety conditions at the job site related to the regulated substances. This includes the health and safety of workers and public during work and non-working hours. The Contractor shall inform all workers and visitors of the potential for exposure to regulated materials. The Contractor shall follow regulatory procedures to prevent the release of contamination.

Contaminated material excavated during the project is considered solid waste. The Contractor's Health and Safety Plan shall specify training requirements for the site, including 24-, 48-, or 80- hour OSHA training as referenced in WAC 296 843 20010, if applicable. The Contractor shall be responsible for all training costs.

2-17.2(1) Health and Safety Laws and Regulations

For all work conducted within the limits of this project site, the Contractor shall ensure compliance with all applicable health and safety provisions for hazardous waste operations, including requirements of the Federal Occupation Safety and Health Act of 1970 (OSHA) and all amendments, including 29 CFR Part 1910, WAC 296-843, as well as any other applicable regulations. Failure to be thoroughly familiar with applicable health and safety provisions shall not relieve the Contractor of the responsibility to fully comply with all laws and regulations.

2-17.2(2) Site Health and Safety Plan

The Site Health and Safety Plan shall be prepared in accordance with WAC 173-340-810. The Contractor shall develop a written Site Health and Safety Plan to be used for the duration of the project. The plan shall incorporate all required city, county, state, and federal health and safety provisions. The plan shall be submitted to the City within ten (10) working days after execution of the contract. The Contractor is advised that the City will review the Site Health and Safety Plan, but the Contractor is solely responsible for ensuring that the Site Health and Safety Plan is implemented in accordance with the regulatory requirements. At least one copy of the plan shall be maintained at the work site. A properly qualified individual shall be assigned to serve as the Site Health and Safety Officer, authorized to supervise and enforce compliance with the plan. The Health and Safety Officer shall be responsible for monitoring the work area for health hazards including sampling of the air, soil, and water as required to ensure worker safety.
All provisions of the Site Health and Safety Plan shall apply to the Contractor, Subcontractors, and all other visitors to the site. Approved Subcontractors may elect to develop a site-specific plan, but this shall not relieve the Contractor of the requirements and responsibilities described herein. The terms and provisions of a Subcontractor's site-specific plan shall meet or exceed the Contractor's plan and shall be submitted to the City or its agents prior to the Subcontractor commencing work.

The Site Health and Safety Plan shall comply with all applicable regulations and shall include, but not be limited to:

1. A list of chemical hazards and physical hazards, allowable OSHA exposure levels, threshold limit values, and all other regulatory exposure levels.
2. If 24, 48, or 80 hour training is required by the Site Health and Safety Plan, then the Contractor shall provide a list of all persons, by work category/type, who will be trained. Photocopies of the employee's training certificates shall be submitted to the City of Tacoma.
3. Engineering controls, work practices, personnel and equipment decontamination procedures, and types of personal protective equipment to be used.
4. A list of safety and monitoring equipment to be kept at the job site and its storage location. A record of monitoring equipment calibration shall be maintained.
5. A list of required health and safety information to be documented.
6. An emergency evacuation plan for immediate removal to the nearest hospital or doctor's care for any person who may be injured on the job site. It shall include evacuation routes to medical treatment and emergency telephone numbers for hospitals, ambulances, police and fire departments, poison control, and the City of Tacoma.

In the event the Health and Safety Plan is determined by a regulatory agency to be inadequate to protect the employees and the public, then the Plan shall be modified by the Contractor at the Contractor's sole expense.

2-17.2(3) Site Health and Safety Officer

The Contractor shall appoint a Site Health and Safety Officer for the project. The Health and Safety Officer must meet the requirements contained in 29 CFR Part 1910 and Chapter 296-62 WAC and who is qualified by experience and training in hazardous waste operations in accordance with other applicable laws, regulations, and requirements of this Section. The Site Health and Safety Officer shall be qualified and authorized to monitor, supervise, and enforce safety compliance with the Site Health and Safety Plan. A resume of the Site Health and Safety Officer's qualifications shall be submitted to the City for review with the Site Health and Safety Plan. The Site Health and Safety Officer shall be on site at all times when work operations involve excavation and trenching or at other times when the potential for encountering hazardous substances exists as identified as contaminated soil in the Plans and Section 2-17.

The Contractor shall be solely responsible for identification and monitoring of air (gases), soil, dust, and groundwater with chemical constituents that could pose health and safety concerns to site personnel. The Contractor shall provide for the protection of safety and health of all workers and other authorized persons, including the City and its agents at the jobsite from exposure to potentially hazardous substances.

The Contractor shall be solely responsible for ensuring that all necessary monitoring equipment, protective clothing, and other supplies and equipment up to the appropriate level of protection as defined by WISHA, OSHA, and other applicable guidelines are available to implement the plan. No work shall take place in areas where hazardous substances may potentially be present unless the Site Health and Safety Officer is present and monitoring site conditions.

The Contractor, through the Site Health and Safety Officer, shall not permit any employee, in the performance of the Contract, to work under conditions which are hazardous to the employee. Should violations of the safety and health requirements be called to the Site Health and Safety Officer's attention by the City, its agent, or any authorized representative of a regulator agency, then the Contractor shall immediately correct the identified conditions.

2-17.2(4) Contractor Safety Equipment

The Contractor shall maintain, at the job site, first-aid and safety equipment applicable to the work as prescribed by the governing safety authorities. All required safety equipment shall be kept in fully operational condition for the duration of the contract.

All personnel shall be trained in the use of the appropriate safety equipment that would be utilized during the course of their work. The Site Health and Safety Officer shall ascertain that the safety equipment is being used when appropriate and/or required.

2-17.2(5) Soil Management Plan

The Contractor shall submit a detailed plan for management of all excavated soils. The plan shall include excavation, stockpiling, decanting free liquids, loading, and transporting procedures, dust control procedures, screening and decontamination of excavation equipment.

2-17.3 Construction Requirements

Construction activities at the site will generate excess soils and possible groundwater associated with the installation of underground utilities. The Contractor shall fully develop and implement a program in accordance with the Health and Safety Plan to ensure worker health and safety and to minimize disruption to construction due to site contamination.

2-17.3(1) Notification

The Contractor shall notify the City of Tacoma, in writing, at least (10) working days operations are to begin and identify the limits of that excavation. Excavation and sampling shall not take place without a designated representative from the City of Tacoma on site.

2-17.3(2) Transportation

2-17.3(2)A General

The Contractor shall provide all equipment, personnel, and materials necessary to load and transport waste materials, including contaminated soils and debris, for off-site disposal in accordance with federal, state, and local regulations.

2-17.3(2)B Control of Waste Material

Vehicles used by the Contractor to transport waste materials shall be properly designed, equipped, and maintained to prevent the loss of materials during transport. The following requirements shall be met for all vehicles transporting waste materials from the site:

- If contaminated soil is temporarily stockpiled prior to loading into trucks, the stockpiled material shall be placed on a minimum 10 Mil polyethylene liner, surrounded by berms and covered with minimum 6 Mil polyethylene sheeting to prevent water from entering into or discharging from the stockpile.
- No soil from the site shall adhere to the outside of the surface of the vehicle (including tires and undercarriage).
- No liquids shall be leaking or dripping from the vehicles.
- Any and all waste materials shall be covered with tarpaulin or otherwise completely enclosed to prevent loss of materials from the vehicle during transport.

Free draining liquids present in contaminated materials shall be decanted before loading for offsite disposal. The contractor is responsible for collection, treatment and permitted disposal of decanted liquids from contaminated soils in accordance with all applicable regulations. The Contractor shall collect decanted liquid, pump to on-site water storage tanks and manage water as described in Special Provisions Section 8-01.3(1)C Water Management.

The Contractor shall minimize the spread of contaminated materials by physically decontaminating all excavation equipment in a designated decontamination area.

Physical decontamination techniques shall include brushing and spraying with a pressure washer. All equipment will need to be brushed that is in contact with contaminated material. Brushing shall consist of removal of loose materials with the use of broom and/or brushes. If truck wheels are in contact with any soil from the Project, the wheels shall be pressure washed before leaving the Project area. A pressure washer shall be used to provide application of water of sufficient pressure, residence time, and agitation to remove soil and contaminated residuals from surfaces. The Contractor shall dispose of decontamination water generated onsite in accordance with all applicable regulations.

The Contractor shall be responsible for the onsite/offsite management and disposal of all incidental wastes resulting from handling of contaminated soil and groundwater. Incidental items include, but not limited to, personal protective equipment (PPE), decontamination water, erosion control materials, residual soil samples, and other materials (plastic sheeting, wash basins, scrub brushes, rags, etc.) The Contractor shall collect decontamination liquid, pump to on-site water storage tanks and manage water as described in Special Provisions Section 8-01.3(1)C Water Management.

2-17.3(2)C Street Sweeping

The Contractor shall sweep streets when truck traffic carries soil from the site into the streets. Street sweeping shall be conducted in such a way as to not generate visible dust. Material collected from street sweeping shall be disposed of in a legal manner at an off-site location and be included in the Erosion/Water Control lump sum bid item.

2-17.3(2)D Transportation and Shipping Requirements

The Contractor shall be responsible for obtaining permits and authorizations necessary to use the selected haul routes. Each truck driver shall have a copy of the WDA, one for every load of CID material hauled to LRI. LRI will stamp a copy of the WDA for each load upon acceptance and delivery.

If the Contractor violates the conditions of the CID authorization, the material shall be redesignated as F-listed Hazardous Waste. The Contractor shall use United States DOT regulations, 49 CFR 172.101 to identify proper shipping names for each hazardous material (including Dangerous Waste) to be shipped off site. Proper shipping names and profiles shall be submitted to the City of Tacoma in the form of draft shipping documents and waste manifests for review and comment. The City of Tacoma shall not be responsible for any cost increases as a result of the Contractor's violations or for diposal of the material as a listed hazardous or characteristic dangerous waste. The Contractor shall only be compensated in accordance with the Contract bid prices for disposal as CID authorized material at the designated disposal location.

The Contractor shall ensure that each shipment of material sent off site is accompanied by the appropriate shipping documents. The Contractor shall prepare a bill of lading for each shipment of regulated material which does not require a hazardous waste manifest. The bill of lading shall satisfy the requirements of United States DOT regulations, 49 CFR 172 Subpart C and any applicable state or local law or regulation, and shall be submitted to the City of Tacoma for review. The Contractor shall be responsible for completing the shipping documents and obtaining the signatures of the City of Tacoma as needed. The Contractor shall supply weight tickets for contaminated soil disposed

offsite. The Contractor shall supply Certificates of Disposal for CID contaminated soil disposed offsite within 14 days to the Engineer.

2-17.3(3) Off-site Treatment and Disposal

The Contractor shall provide documentation of legal disposition including weigh tickets and Certificates of Disposal.

2-17.4 Measurement

No specific measurement shall apply to the lump sum item of Site Health and Safety Plan, Site Health and Safety Officer, and Soil Management Plan.

2-17.5 Payment

Payment will be made in accordance with Section 1-04.1 for each of the following Bid Items that are included in the Proposal:

“Site Health and Safety Plan”, per lump sum.

“Site Health and Safety Officer”, per lump sum.

“Soil Management Plan”, per lump sum.

Health and safety training, safety equipment and practices, dust control, efficiency losses to other Contract items caused by handling contaminated materials, and other Work required to comply with this specification not specifically identified in a Bid item shall be considered incidental to the work to comply with this Section and all costs therefore shall be included in the Contract prices for the payment items involved and included in the Proposal.

END OF SECTION

3-04 ACCEPTANCE OF AGGREGATE
(******)

3-04.1 Description
This Section is revised to read:

This work shall consist of acceptance of aggregate as provided for under nonstatistical evaluation.

All aggregates shall meet the requirements in Section 9-03.

3-04.3(1) General
This Section is revised to read:

For the purpose of acceptance sampling and testing, all test results obtained for a material type will be evaluated collectively. Sublot sampling and testing will be performed on a random basis at the frequency of one sample per sublot. Based on plan quantities, the sublot size will be determined to the nearest 100 tons (50 cy). The maximum sublot size will be as defined in Table 1.

3-04.3(4) Testing Results
This section is revised to read:

The results of all acceptance testing will be provided by the Engineer within 3 working day of testing.

3-04.3(5) Nonstatistical Evaluation
This Section is revised to read:

Each lot of aggregate materials produced under nonstatistical evaluation and having all constituents falling within the specification limits shall be accepted with no further evaluation. When one or more constituents fall outside the specification limits, the material will be statistically evaluated. A minimum of three sublots will be sampled and tested, when less than three sublots exist additional samples shall be tested to provide a minimum of three sets of results for evaluation. The test results of the sublots shall be evaluated in accordance with Section 1-06.2 using the price adjustment factors from Table 2 to determine the appropriate CPF. The maximum CPF shall be 1.00. If the CPF is below 1.00 but is equal to or above 0.75, a price adjustment will be calculated in accordance with Section 3-04.3(8). When the aggregate does not have established price adjustment factors, use the appropriate price adjustment factors from “Other Materials” as listed in Table 2.

3-04.3(6) Statistical Evaluation
This section is deleted:

END OF SECTION

4-04 BALLAST AND CRUSHED SURFACING

(******)

4-04.2 Materials

This section is supplemented with the following:

(******)

The Contractor shall substitute Recycled Concrete Aggregate for crushed surfacing and ballast for construction of road base and subgrade for HMA pavement. Gradation shall approximate that for Crushed Surfacing Top Course, or as approved by the Engineer in order to facilitate grading and compaction.

To provide a common basis of bid, the bid Proposal includes a Crushed Surfacing Top Course (CSTC) quantity per ton for 2-inch foundation all sidewalk, curb ramps and any driveway approach construction. The Contractor is allowed to substitute Recycled Concrete Aggregate for this purpose as well, if only the gradation approximates CSTC to facilitate satisfactory grading and compaction for this Work.

Recycled Concrete Aggregate shall conform to the requirements of Section 9-03.21.

The contractor shall use CSTC in conduit trenches, at junction boxes, in Power Ductbank trenches and at Power Vaults for cover and backfill, and as shown per Plans as applicable. This backfill is included in the quantity per ton for “Crushed Surfcacing Top Course”.

4-04.3(5) Shaping and Compaction

The second paragraph is revised to read:

To evaluate the road base compaction of Recycled Concrete Aggregate the Contractor shall perform a wheel roll test with a loaded dump truck in the presence of the Engineer for evaluation of satisfactory compaction. The Engineer may direct test point compaction evaluation to be performed in accordance with SOP 738. The Engineer will evaluate achieved compaction based on the wheel roll test alone or in combination with test point results.

4-04.5 Payment

This section is supplemented with the following:

All costs for labor, equipment, and materials required to furnish, haul, place, and compact the material in accordance with the Plans and Specificactions shall be included in the unit Contract price.

The Contract unit price per ton for “Crushed Surfacing Top Course” shall also be full compensation for backfilling utility trenches and for backfilling around vaults and utility structures in accordance with the Contract, Plans and Specifications.

“Recycled Concrete Aggregate”, per ton

The Contract unit price per ton for “Recycled Concrete Aggregate” shall be full compensation for furnishing, hauling, placing and compacting the recycled concrete aggregate in place in accordance with the Contract, Plans and Specifications.

END OF SECTION

5-04 HOT MIX ASPHALT

(******)

This Section is revised according to the following overriding provisions:

Nonstatistical or test point evaluation shall be the method for HMA compaction acceptance for all HMA pavement, except where visual or commercial evaluation is specified. Visual evaluation shall be considered synonymous with commercial evaluation. The City of Tacoma will not be required to perform any acceptance by statistical evaluation.

All references to “statistical” are revised to read “nonstatistical”, and “nonstatistical” evaluation shall be considered synonymous with “test point” evaluation. Thus, all Specifications for test procedures, methods, construction requirements, and requirements for evaluation and acceptance shall apply to the Work with the following exceptions:

- The City of Tacoma shall not be required to perform statistical analysis of any acceptance test results.
- Quantities for sublots and lots shall be as determined by the Engineer. If test results are found not to be within specification requirements, additional testing as needed to determine a CPF may be performed.
- The City of Tacoma shall not be required to make price adjustments based on pay factors and composite pay factors.

5-04.2 Materials

This section is supplemented with the following:

(******)

Fiber Reinforcement

Fiber reinforcement shall consist of Aramid fibers and polyolefin fibers, with the polyolefin fibers intended to keep the Aramid fibers together until incorporation into the HMA mix. Once incorporated into the mix and during the HMA production process polyolefin fibers will melt and/or become plastically deformed allowing Aramid fibers to separate.

Aramid fibers shall meet the following requirements:

Length	3/4” (19 mm)
Form	Monofilament
Acid/Alkali Resistance	Inert
Tensile Strength	400,000 psi
Specific Gravity	1.44
Operating Temperatures	-300° F to 800° F (-73° C to 427° C)

Polyolefin fibers shall meet the following requirements:

Length	3/4” (19 mm)
Form	Fillibrated
Acid/Alkali Resistance	Inert
Specific Gravity	0.91

5-04.2(1) How to Get an HMA Mix Design on the QPL
(April 1, 2018 Tacoma GSP)
For Subsection 5-04.2(1) the term "Contracting Agency" is revised to read "WSDOT".

5-04.2(2) Mix Design – Obtaining Project Approval
(April 1, 2018 Tacoma GSP)
This section is revised to read:

The Contactor shall submit each HMA mix design to the City of Tacoma on WSDOT Form 350-042. The Contractor shall provide a mix design based upon 3 million ESAL's.

No paving shall begin prior to the HMA mix design acceptance by the Engineer for the Job Mix Formula (JMF) that will be used for the same paving. The City of Tacoma will evaluate HMA mix design submittals according to Visual Evaluation per Table 1. The mix design will be the initial JMF for the class of HMA. The Contractor may request a change in the JMF. Any adjustments to the JMF will require the approval of the Project Engineer and must be made in accordance with Section 9-03.8(7).

Mix designs for HMA shall have the aggregate structure and asphalt binder content determined in accordance with WSDOT Standard Operating Procedure 732 and meet the requirements of Sections 9-03.8(2) and 9-03.8(6). The Contractor shall determine anti-strip additive requirements for the HMA and submit laboratory test data for anti-stripping and rutting in accordance with the following options:

- Hamburg Wheel track Test and Section 9-03.8(2), or
- Tensile Strength Ratio (TSR) Test per AASHTO T 283, or
- Previous WSDOT Lab mix design verification test data and stripping evaluation, per the Engineer's discretion and as stated below.

With the HMA mix design submittal the Contractor shall provide one of the following mix design verification certifications for City of Tacoma review:

- The WSDOT Mix Design Evaluation Report from the current WSDOT QPL, or one of the mix design verification certifications listed below.
- The proposed HMA mix design on WSDOT Form 350-042 with the seal and certification (stamp & signature) of a valid licensed Washington State Professional Engineer.**
- The Mix Design Report for the proposed HMA mix design developed by a qualified City or County laboratory that is within one year of the approval date.**

**The mix design shall be performed by a lab accredited by a national authority such as Laboratory Accreditation Bureau, L-A-B for Construction Materials Testing, The Construction Materials Engineering Council (CMEC's) ISO 17025 or AASHTO Accreditation Program (AAP) and shall supply evidence of participation in the AASHTO resource proficiency sample program.

At the discretion of the Engineer, the City of Tacoma may accept verified mix designs older than 12 months from the original verification date with a certification from the Contractor that the materials and sources are the same as those shown on the original mix design.

For the use of Commercial HMA, the Contractor shall select a class of HMA and design level of Equivalent Single Axle Loads (ESAL's) appropriate for the required use.

Commercial HMA can be accepted by a Contractor certificate of compliance letter stating the material meets the HMA requirements defined in the Contract.

5-04.2(2)B Using HMA Additives
(April 1, 2018 Tacoma GSP)
This section is revised to read:

The Contractor may, at the Contractor's discretion, elect to use additives that reduce the optimum mixing temperature or serve as a compaction aid for producing HMA. Additives include organic additives, chemical additives and foaming processes. The use of Additives is subject to the following:

- Do not use additives that reduce the mixing temperature in the production of High RAP/Any RAS mixtures.

- Before using additives, obtain the Engineer's approval using WSDOT Form 350-076 to describe the proposed additive and process.

5-04.3 Construction Requirements

5-04.3(2) Paving Under Traffic
(April 1, 2018 Tacoma GSP)
The second paragraph is supplemented with the following:

No traffic shall be allowed on any newly placed pavement without the approval of the Engineer.

5-04.3(3)C Pavers
(April 1, 2018 Tacoma GSP)
The second paragraph is deleted.

5-04.3(3)D Material Transfer Device or Material Transfer Vehicle
(April 1, 2018 Tacoma GSP)
The first paragraph is revised to read:

A Material Transfer Device/Vehicle (MTD/V) shall not be used unless specific paving areas are specified below. A MTD/V shall only be used according to this special provision for the following paving areas: None

5-04.3(4)C Pavement Repair
(April 1, 2018 Tacoma GSP)
This section is revised to read:

Pavement repair is not anticipated and shall be as directed by the Engineer in the field.

Payment for pavement repair shall be by the unit Bid prices according to the Contract for all materials, labor, and equipment required to complete the pavement repair. Items not included in the Proposal shall be paid for according to Section 1-04.1(2).

5-04.3(6) Mixing
(April 1, 2018 Tacoma GSP)
The first paragraph is revised to read:

The asphalt supplier shall add anti-stripping additive to the liquid asphalt prior to shipment to the asphalt mixing plant. The Contractor shall submit the anti-stripping additive amount and the manufacturer's certification, together with the HMA mix design submittal in accordance with Section 5-04.2. Paving shall not begin before the anti-stripping additive submittal is accepted by the Engineer.

This Section is supplemented with the following:

Mixing Fiber Reinforced HMA
(******)

Fiber reinforcement shall be added to the approved HMA mix at a rate of 1 pound of fiber per 1 ton of HMA.

Fiber shall be added to the HMA mix through specialized equipment that can accurately proportion and/or meter, by weight, the proper amount per batch for batch plants, or continuously and in a steady uniform manner for drum plants. Alternatively, upon the approval of the Engineer, fiber may be added manually using pre-weighed dissolvable bags.

Specialized equipment shall be as recommended by the fiber manufacturer and shall be capable of controlling the weight of fibers added.

Fiber shall be mixed with the HMA in accordance with the fiber manufacturer's recommendations.

5-04.3(9) HMA Mixture Acceptance
(April 1, 2018 Tacoma GSP)
The first paragraph is revised to read:

The City of Tacoma will evaluate the HMA mixture by nonstatistical or visual evaluation as determined from the criteria in Table 7 or as determined by the Engineer.

5-04.3(9)A Test Sections
(April 1, 2018 Tacoma GSP)
The first paragraph is revised to read:

At the start of paving, if requested by the Contractor, a compaction test section shall be constructed as directed by the Engineer to determine the compactibility of the mix design. Compactibility shall be based on the ability of the mix to attain the specified minimum density (91 percent of the maximum density determined by WSDOT SOP 729, and FOP for AASHTO T 209).

Following determination of compactibility, the Contractor is responsible for the control of the compaction effort. If the Contractor does not request a test section, the mix will be considered compactible. See also Section 5-04.3(10)C2.

The Contractor shall also construct a test section when requested by the Engineer. Test sections that are in complete compliance with the requirements of Section 5-04 can be incorporated into the Work, and shall be included in the quantities for related Bid Items; otherwise, the Contractor shall remove the defective pavement in failed test sections as determined by the Engineer and at no cost to the City of Tacoma. The City of Tacoma will only pay for HMA pavement that is accepted and incorporated into the project at the discretion of the Engineer. See also Section 5-04.3(10)C2.

The second paragraph is revised to read:

The purpose of a test section is to determine whether or not the Contractor's mix design and production processes will produce HMA meeting the Contract requirements related to mixture. Construct HMA mixture test sections at the beginning of paving, using at least 100 tons and a maximum of 800 tons or as specified by the Engineer. Each test section shall be constructed in one continuous operation.

5-04.3(9)B Mixture Acceptance – Statistical Evaluation
(April 1, 2018 Tacoma GSP)
The title of this section is revised to read:
5-04.3(9)B Mixture Acceptance – Nonstatistical Evaluation

5-04.3(9)B1 Mixture Statistical Evaluation – Lots and Sublots
(April 1, 2018 Tacoma GSP)
The title of this section is revised to read:
5-04.3(9)B1 Mixture Nonstatistical Evaluation – Lots and Sublots
This section is revised to read:

For HMA in a structural application, sampling and testing for total project quantities less than 400 tons is at the discretion of the engineer. For HMA used in a structural application and with a total project quantity less than 800 tons but more than 400 tons, a minimum of one acceptance test shall be performed:

- If test results are found to be within specification requirements, additional testing will be at the engineer's discretion.
- If test results are found not to be within specification requirements, additional testing as needed to determine a CPF shall be performed.
- For a mixture lot in progress with a mixture CPF less than 0.75, a new mixture lot will begin at the Contractor's request after the Engineer is satisfied that material conforming to the Specifications can be produced. See also Section 5-04.3(11)F.
- If, before completing a mixture lot, the Contractor requests a change to the JMF which is approved by the Engineer, the mixture produced in that lot after the approved change will be evaluated on the basis of the changed JMF, and the mixture produced in that lot before the approved change will be evaluated on the basis of the unchanged JMF; however, the mixture before and after the change will be evaluated in the same lot. Acceptance of subsequent mixture lots will be evaluated on the basis of the changed JMF.

5-04.3(9)E Mixture Acceptance – Notification of Acceptance Test Results
(Aug 1, 2020 Tacoma GSP)
This section is revised to read:

The City of Tacoma will endeavor to provide written notification (via email to the Contractor's designee) of acceptance test results within 24 hours of the sample being made available to the City of Tacoma. However, the Contractor agrees:

1. Quality control, defined as the system used by the Contractor to monitor, assess, and adjust its production processes to ensure that the final HMA mixture will meet the specified level of quality, is the sole responsibility of the Contractor.

2. The Contractor has no right to rely on any testing performed by the City of Tacoma, nor does the Contractor have any right to rely on timely notification by the City of Tacoma of the City of Tacoma's test results (or statistical analysis thereof), for any part of quality control and/or for making changes or correction to any aspect of the HMA mixture.

3. The Contractor shall make no claim for untimely notification by the City of Tacoma of the City of Tacoma's test results (or statistical analysis thereof).

5-04.3(10)B HMA Compaction - Cyclic Density
(April 1, 2018 Tacoma GSP)
This section is deleted.

5-04.3(10)C1 HMA Compaction Statistical Evaluation – Lots and Sublots
(April 1, 2018 Tacoma GSP)
This section is deleted.

5-04.3(10)C2 HMA Compaction Statistical Evaluation – Acceptance Testing
(April 1, 2018 Tacoma GSP)
The title of this section is revised to read:

5-04.3(10)C2 HMA Compaction Nonstatistical Evaluation – Acceptance Testing
The second paragraph is revised to read:

Compaction tests will be performed at a minimum of 5 various locations, as determined by the Engineer, for each 400 tons placed. The locations will be determined by the stratified random sampling procedure conforming to WSDOT Test Method T 716. For an area in progress with a CPF less than 0.75, a new compaction sequence will begin at the Contractor's request after the Project Engineer is satisfied that material conforming to the Specifications can be produced. The Compaction Test Procedures will be provided to the Contractor by the City of Tacoma at the Pre-Construction Conference or a Pre-Paving Meeting, prior to the placement of HMA material on site.

This section is supplemented with the following:

Cores may be used as an addition to the nuclear density gauge tests. When cores are taken by the Engineer at the request of the Contractor, the request shall be made by

noon of the first working day following placement of the mix. The Engineer shall be reimbursed for the coring expenses.

The Engineer will inform the Contractor of field compaction test results as work is being performed. Formal Test Report(s) will be provided to the Contractor within 3 Working Days.

HMA for preleveling shall be compacted to the satisfaction of the Engineer.

Temporary Pavement Patch
(******)

To maintain the street or road open to traffic, the Contractor shall place a temporary pavement patch in accordance with the Plans and Specifications and as directed by the Engineer. Temporary pavement patches are allowed with Cold Plant Mix Asphalt, except temporary pavement patches placed between October 1st and March 31st shall be HMA Cl. ½" PG 58H-22.

5-04.4 Measurement
(******)
The first paragraph is revised to read:

HMA Cl. ___ PG ___, Fiber Reinforced HMA Cl. __ PG __, HMA for __ Cl. __ PG __, and Commercial HMA will be measured by the ton in accordance with Section 1-09.2, with no deduction being made for the weight of asphalt binder, blending sand, mineral filler, anti-stripping additive, or any other component of the mixture; and the measurement shall include asphalt wedge curbs and thickened edges in accordance with the Plans or as directed by the Engineer. If the Contractor elects to remove and replace mix as allowed in Section 5-04.3(11), the material removed will not be measured.

The second paragraph is revised to read:

No specific unit of measure will apply to roadway cores, which shall be included in the measurements for the HMA items that are included in the Proposal.

This section is supplemented with the following:

Temporary Pavement Patch will be measured by the ton of material placed for each occasion of temporary paving as directed by the Engineer.

No specific unit of measure will apply to anti-stripping additive, which shall be included in the measurements for the HMA items that are included in the Proposal.

5-04.5 Payment
(******)
Pay items for "Job Mix Compliance Price Adjustment" and "Compaction Price Adjustment" are deleted.

This section is supplemented with the following:

"Temporary Pavement Patch", per ton.

The unit Contract price for "Temporary Pavement Patch" shall be full pay for all labor, equipment, and materials required to furnish and install; maintain; and remove and dispose of the temporary patch in accordance with Special Provision 5-04.3(18) and Section 5-04.

"Fiber Reinforced HMA Cl. ___ PG ___", per ton.

The unit Contract price per ton for "Fiber Reinforced HMA Cl. ___ PG ___" shall be full payment for all costs incurred to carry out the requirements of Section 5-04, including coring and testing, and shall include fiber reinforcement, anti-stripping additive, in accordance with the Contract.

END OF SECTION

6-02 CONCRETE STRUCTURES
(*******)

6-02.3(1) Classification of Structural Concrete
This section is supplemented with the following:

Sidewalks, Driveway Entrances, Curbs and Gutters shall be constructed with Concrete Class 3000 psi. at a minimum.

6-02.3(2)B Commercial Concrete
The second paragraph is revised to read:

Where concrete Class 3000 is specified for items such as culvert headwalls, plugging culverts, concrete pipe collars, pipe anchors, monument cases, Type PPB, PS, I, FB and RM signal standards, pedestals, cabinet bases, guardrail anchors, and fence post footings, the Contractor may use commercial concrete.

This section is supplemented with the following:

The Contractor shall not use commercial concrete for Driveway Entrances, Sidewalks, and Curbs and Gutters.

END OF SECTION

7-05 MANHOLES, INLETS, CATCH BASINS, AND DRYWELLS (******)

7-05.1 Description

This section is supplemented with the following:

All references to sanitary sewers shall be construed to also mean storm sewers.

7-05.3 Construction Requirements

The first paragraph is supplemented with the following:

(******)

All material excavated for the installation of the structures shall be considered unsuitable for backfill and replaced with 100% imported backfill material meeting the requirements of Section 9-03.12(2) Gravel Backfill for Walls. Excavation and payment shall be in accordance with Special Provisions Section 2-09, Structure Excavation.

The Contractor shall haul and dispose of all contaminated soil material excavated from the Project site in accordance with the Contract, Plans, and Specifications to LRI Landfill, located at 30919 Meridian Street East, Graham, WA 98338 in accordance with Special Provisions Section 2-17. <u>The Contractor shall not include the cost of the disposal fees in the bid item. The City of Tacoma will pay the disposal fees directly to LRI.</u>

7-05.3(1) Adjusting Manholes and Catch Basins to Grade

This section is revised to read:

7-05.3(1) Adjusting Utility Structures to Grade

Where shown in the Plans or where directed by the Engineer, utility structures shall be adjusted to grade as staked or as otherwise designated by the Engineer.

The materials and methods of construction shall conform to the requirements specified in Section 7-05.3 and Standard Plan No. SU-25 and SU-37. The finished structure shall conform to the requirements of the standard plan for the specific structure.

7-05.5 Payment

The first paragraph is supplemented with the following:

Add the following pay items:

"Adjust Existing Manhole, Furnish New Frame and Cover", per each

The unit Contract price per each for “Adjust Existing Manhole, Furnish New Frame and Cover” shall be full pay for all costs associated with adjusting the frame and cover to finished grade, including but not limited to, furnish and place backfill, furnishing and installing the new frame and cover, compacting, surfacing, and restoration.

“Adjust Existing Valve Chamber to Grade”, per each

The unit Contract price per each for “Adjust Existing Valve Chamber to Grade” shall be full pay for all costs associated with the adjusting the valve chamber to finished grade, including but not limited to, , furnish and place backfill, compacting, surfacing, and restoration.

END OF SECTION

7-07 CLEANING EXISTING DRAINAGE STRUCTURES
(March 23, 2010 Tacoma GSP)

7-07.3 Construction Requirements

Item three of paragraph two is revised to read:

3. If sediment and water from structures does not meet the conditions described in 1 or 2 above, the Contractor shall collect and dispose of all water used and all debris generated in cleaning operations. No cleaning water or debris shall be flushed downstream beyond the limits of the work.

END OF SECTION

8-01 EROSION CONTROL AND WATER POLLUTION CONTROL (******)

8-01.1 Description

This section is supplemented with the following:

The City of Tacoma Stormwater Management Manual is available on the City's website at www.cityoftacoma.org/stormwatermanual .

8-01.3 Construction Requirements

8-01.3(1) General

This section is supplemented with the following:

8-01.3(1)A Submittals

This section is revised to read:

Construction Stormwater Pollution Prevention Plan

The Contractor shall prepare and implement a project-specific Construction Stormwater Pollution Prevention Plan (SWPPP) in accordance with the City of Tacoma Stormwater Management Manual (SWMM), Volume 2. The SWPPP is a document that describes the potential for pollution problems on a construction site and explains and illustrates the measures to be taken on the construction site to control those problems.

The Construction SWPPP shall be prepared as a stand-alone document consisting of two sections: Section 1) Construction SWPPP Narrative and Section 2) Temporary Erosion and Sediment Control (TESC) Plans.

The City of Tacoma has prepared the Construction Stormwater Pollution Prevention Plan Checklist to aid the Contractor in development of the SWPPP. This checklist provides the Contractor with a tool to determine if all the major items are included in the Construction SWPPP and on the TESC Plans and can be found in Volume 2, Chapter 2 of the SWMM. Contractors are encouraged to complete and submit this checklist with the Construction SWPPP.

The Department of Ecology has prepared a SWPPP template that can be used for projects in the City of Tacoma. The template can be found on Ecology's website at: http://www.ecy.wa.gov/programs/wq/stormwater/construction/resourcesguidance.html. The Contractor developing the SWPPP must ensure that all references are appropriate for the City of Tacoma.

The SWPPP is considered a "living" document that shall be revised to account for additional erosion control/pollution prevention BMPs as they become necessary and are implemented in the field during project construction. A copy of the most current SWPPP and TESC Plan shall remain on-site at all times and an additional copy shall be forwarded to the Engineer. At the Contractor's preference, revisions to the SWPPP and TESC Plan may be forwarded to the Engineer rather than submitting a complete document. Revisions to the SWPPP and TESC Plan may be kept on-site in a file along with the original SWPPP document.

The Contractor shall provide Stormwater Pollution Prevention Plan inspection reports or forms per 8-01.3(1) B to the Project Engineer no later than the end of the next working day following the inspection.

8-01.3(1)B Erosion and Sediment Control (ESC) Lead

This section is revised to read:

The Contractor shall identify the ESC Lead at the Preconstruction Meeting and the contact information for the ESC Lead shall be added to the Stormwater Pollution Prevention Plan (SWPPP) Report and the Temporary Erosion and Sediment Control (TESC) Plan Sheet. The ESC Lead shall maintain, for the life of the contract, a current Certified Erosion and Sediment Control Lead (CESCL) certificate or maintain a current Certified Professional in Erosion and Sediment Control (CPESC) certificate from a course approved by the Washington State Department of Ecology. The CESCL or CPESC shall be listed on the Emergency Contact List required under Section 1-05.13(1).

The CESCL or CPESC shall direct implementation of the measures identified in the SWPPP and as shown on the TESC plan. Implementation shall include, but is not limited to the following:

4. Installing and maintaining all temporary erosion and sediment control Best Management Practices (BMPs) included in the SWPPP and as shown on the TESC plan. Damaged or inadequate BMPs shall be corrected as needed to assure continued performance of their intended function in accordance with BMP specifications and Permit requirements.
5. Performing monitoring as required by the NPDES Construction Stormwater General Permit.
6. Inspecting all on-site erosion and sediment control BMPs at least once every calendar week and within 24 hours of any discharge from the site. A SWPPP Inspection report or form shall be prepared for each inspection and shall be included in the SWPPP file. A copy of each SWPPP Inspection report or form shall be submitted to the Engineer no later than the end of the next working day following the inspection. The report or form shall include, but not be limited to the following:
    a. When, where, and how BMPs were installed, maintained, modified, and removed.
    b. Observations of BMP effectiveness and proper placement.
    c. Recommendations for improving future BMP performance with upgraded or replacement BMPs when inspections reveal SWPPP inadequacies.
    d. Approximate amount of precipitation since last inspection and when last inspection was performed.
7. Updating and maintaining a SWPPP file on site that includes, but is not limited to the following:
    a. SWPPP Inspection Reports or Forms.
    b. SWPPP narrative.
    c. National Pollutant Discharge Elimination System Construction Stormwater General Permit (Notice of Intent).
    d. All documentation and correspondence related to the NPDES Construction Stormwater General Permit.

e. Other applicable permits.

Upon request, the file shall be provided to the Engineer for review.

8-01.3(1)C Water Management
This section is revised to read:

General. The Contractor is responsible for keeping excavations free from standing water during construction and disposing of the water in a manner that will not cause pollution, injury to public or private property, or cause a nuisance to the public. Groundwater flowing toward, into, or within excavations shall be controlled to prevent sloughing of excavation walls, boils, uplift, and heave in the excavation, and to eliminate interference with orderly progress of construction. The control of groundwater shall be such that softening of the bottom of excavations, or formation of “quick” conditions or “boils” during excavation, shall not occur. The Contractor is responsible for all foundation material required due to lack of dewatering efforts.

Geologic conditions within the project area vary. Additionally, there are seasonal fluctuations in the groundwater level. If the groundwater is encountered in excavations in quantities that require pumping, storage and discharge to the sanitary sewer to achieve project objectives the dewatering requirements below will be applicable to complete dewatering. If dewatering by pumps and discharge to the City sanitary sewer is required as approved by the Engineer, then the Contractor will be paid under a Force Account per Section 8-01.5.

The Contractor is responsible for preventing stormwater from entering storm water system. Refer to TESC requirements Section 8-01.

Dewatering Requirements. The Contractor shall design, construct, and operate a dewatering system in accordance with this Section and the SAD Authorization as necessary to achieve the objectives of the Project. The Contractor shall have competent workers available at all times for the continuous and successful operation of the dewatering and monitoring system as necessary if dewatering is required in subsurface excavations at the Site. The Work includes decanting, storing, treating and proper disposal of free liquids encountered in the CID contaminated excavated material. Please also refer to Section 2-17, and Section 2-17.3(2)B.

Dewatering Plan. The Contractor shall submit a dewatering plan to the Engineer for review in accordance with this section and Section 1-05.3 if a dewatering system is required to be installed in open excavations to complete the Project. Review of the dewatering plan submitted by the Contractor shall not relieve the Contractor from full responsibility for adequate design and performance of the system. The Contractor shall be solely responsible for the proper design, installation, operation and maintenance of the dewatering system. The Contractor shall be liable for any damages caused by system failure.

The dewatering plan shall include the following components:

1. System Components – Describe the method and equipment proposed for dewatering the excavation. The Contractor shall have on hand sufficient

pumping equipment and machinery in good working condition for all emergencies, including power outage and flooding.

2. Treatment Method – Describe how dewatering water that is to be discharged to the City's sanitary sewer system will be treated to meet the applicable discharge limits of the Special Approved Discharge Authorization and Tacoma Municipal Code 12.08. Provide applicable calculations.
3. Point of Discharge – Describe the point of discharge of the dewatering water. Any discharges to private property will require written documentation from the property owner that this point of discharge is permitted. The Contractor shall provide all proposed points of discharge as part of the Special Approved Discharge Authorization Application.
4. Maintenance Plan – Describe how the designed system will be maintained over the course of the project.
5. Monitoring Plan – Describe how discharge will be monitored to ensure compliance with all discharge requirements.
6. Special Approved Discharge (SAD) Authorization Application – The Contractor shall apply for a SAD Authorization as part of the dewatering plan. No discharge of dewatering water to the City's sewer systems will be permitted without obtaining this authorization. The City Construction Manager will provide the SAD authorization application to the Contractor after award of the contract.

Requirements for Dewatering Water Discharge to the Storm Sewer System. Dewatering water will not be permitted to be discharged into the stormwater system on this project.

Requirements for Dewatering Water Discharge to the Sanitary Sewer System. Prior to discharge of dewatering water to the City's sanitary sewer system, sediment control BMPs must be employed. Groundwater discharges to the sanitary sewer system shall have 225 mg/L or less of Total Suspended Solids (TSS) and below chemical limits of the Special Approved Discharge Authorization and Tacoma Municipal Code 12.08.020. TSS and other analytical testing may be completed by the City Lab with a three-day turnaround, or by a third party laboratory at no additional cost to the City.

In addition to the TSS Requirements, the water shall contain no visible oil sheen or chemical odors. If the Contractor encounters any signs of oil within the soil or dewatering water, including any sheen on the water, and/or any chemical odor in the water or soils, the Engineer and Source Control shall be notified immediately and all discharges to the sanitary sewer system shall be stopped immediately.

In the presence of oil sheens and/or chemical odors, the Contractor shall test the dewatering water prior to discharge for contaminants referenced in the Special Approved Discharge Authorization and Tacoma Municipal Code 12.08.020. All discharges to the City's sanitary sewer system shall not exceed the limits of the Special Approved Discharge Authorization or TMC 12.08.020, whichever is most stringent.

The Contractor shall control the flow of water into the downstream system to ensure that the capacity of the City's sanitary sewer system is not exceeded as a result of the additional flows caused by the dewatering water. The Contractor shall contact the

Engineer to request pipe capacity information for the Contractor's proposed discharge points.

The Contractor shall measure and record in gallons the total quantity of dewatering water discharged to the sanitary sewer system. This can be done by metering the flow or calculating batch discharges based on the volume of tanks used. In accordance with the SAD Authorization, the Contractor shall report the discharge quantities with the associated test results to Source Control.

When discharge to the Sanitary Sewer is not approved, the Contractor shall contain and transport the dewatering discharge water to a treatment facility. This Work shall also be paid by force account.

8-01.3(8) Street Cleaning
The last sentence is revised to read:

Street washing with water shall not be permitted.

8-01.3(9)D Inlet Protection
Replace the third paragraph of this section with the following:

When the depth of accumulated sediment and debris reaches approximately 1/3 the height of an internal device or 1/3 the height of the external device (or less when so specified by the manufacturer), or as designated by the Engineer, the sediment and debris shall be removed and disposed of per SWMM BMP C220 or as specified on the Plans or within the SWPPP.

The section is supplemented with the following:

Only bag-type filters are allowed for use in the public right of way.

8-01.4(2) Item Bids
This section is supplemented with the following:

No specific unit of measurement shall apply to the lump sum item "Stormwater Pollution Prevention Plan (SWPPP)".

8-01.4(4) Items not included with Lump Sum Erosion Control and Water Pollution Prevention
This section is revised to read:

Vacant

8-01.5 Payment

8-01.5(2) Item Bids
This section is supplemented with the following:

"Stormwater Pollution Prevention Plan (SWPPP)", lump sum.

The lump sum contract price for “Stormwater Pollution Prevention Plan (SWPPP)” shall be full pay for all costs, including but not limited to, preparing, submitting, revising, and resubmitting revisions for the Stormwater Pollution Prevention Plan.

“Dewatering”, by Force Account

The City of Tacoma shall compensate dewatering work; including decanting CID contaminated material; storing, treating, and proper disposal of free liquids; and including SAD permit and submittals in accordance with these Special Provisions by Force Account, per Section 1-09.6.

8-01.5(4) Items not included with Lump Sum Erosion Control and Water Pollution Prevention

This section is revised to read:

Vacant

END OF SECTION

8-02 ROADSIDE RESTORATION
(******)

8-02.1 Description
This section is supplemented with the following:

This Work shall include roadside maintenance and construction cleanup in accordance with the Specifications.

8-02.2 Materials
This section is supplemented with the following:

Compost shall meet the requirements of Section 9-14.5(8).

8-02.3 Construction Requirements
This section is supplemented with the following:

Soil excavated in connection with this Work shall be included in the measurements and payments for “Roadway Excavation ____ Incl. Haul” in accordance with Section 2-03, Roadway Excavation and Embankment.

The Contractor shall haul and dispose of all soil material excavated from the Project site in accordance with Sections 2-03 and 2-17.

The Contractor shall haul and dispose of all contaminated soil material excavated from the Project site in accordance with the Contract, Plans, and Specifications to LRI Landfill, located at 30919 Meridian Street East, Graham, WA 98338 in accordance with Special Provisions Section 2-17.

8-02.3(1) Responsibility During Construction
The third paragraph is revised to read:

The Contractor shall protect existing trees, grass and vegetation in accordance with the Plans and Section 1-07.16(2). The Contractor shall protect existing planting beds, lawn and grass areas as shown per Plans in accordance with City of Tacoma Standard Plan GSI-01a. The Contractor shall protect existing trees in accordance with City of Tacoma Standard Plans LS-08, LS-09, LS-10, and LS-11, unless these are to be removed per Plans and Specifications.

This Section is supplemented with the following:

The Contactor shall not dump or stockpile topsoil, compost, mulch, or any other landscape materials directly on roadway surfaces and shall employ the appropriate BMPs for stockpiling at a stockpile site out of the right-of-way. The Contractor shall place landscape materials such as Topsoil, Compost or Mulch immediately upon delivery to the jobsite. The Contractor may request to stockpile these materials in writing by submitting a Roadside Work Plan. Stockpiling in the public right-of-way shall only be permitted as approved in writing by the Engineer.

The Contractor shall notify the Engineer of any conflict between the proposed work and any obstructions, and shall repair damage in accordance with Section 1-07.16, Protection and Restoration of Property.

Prior to starting work, the Contractor shall locate and protect all underground utilities in accordance with Section 1-07.17, Utilities and Similar Facilities.

8-02.3(2)A Roadside Work Plan
Item 1.b. is revised to read:

> Means and Methods for vegetation protection in accordance with City of Tacoma Standard Plans GSI-01a, LS-08, LS-09, LS-10, and LS-11; and Section 1-07.16(2).

8-02.3(4) Topsoil
This section is supplemented with the following:

The Contractor shall use Topsoil Type A in accordance with Special Provisions Section 9-14.2 unless otherwise shown on the Plans or as approved by the Engineer.

Scarify or till subgrade in two directions to 6-inch depth. Scarify the entire surface prior to placing Topsoil. Do not scarify within drip line of existing trees to be retained.

8-02.3(4)A Topsoil Type A
This Section is revised to read:

Topsoil Type A shall be an imported topsoil and compost mix from a topsoil supplier or certified composting facility in accordance with Section 9-14.5(8). The Contractor shall place, till and fine grade Topsoil Type A in accordance with Section 8-02 and City of Tacoma Standard Plan GSI-01d. Topsoil Type A shall conform to Sections 9-14.2 and 9-14.2(1). The Contractor shall submit a certification by the supplier that the contents of the Topsoil meet the requirements in the Special Provisions.

8-02.3(4)B Topsoil Type B
This Section is supplemented with the following:
The Contractor shall stockpile, place, amend with compost, till and fine grade Topsoil Type B in accordance with Section 8-02 and City of Tacoma Standard Plan GSI-01c.

8-02.3(4)C Topsoil Type C
This Section is supplemented with the following:
The Contractor shall stockpile, place, amend with compost, till and fine grade Topsoil Type C in accordance with Section 8-02 and City of Tacoma Standard Plan GSI-01c.

8-02.3(5) Roadside Seeding, Lawn and Planting Area Preparation
This section is supplemented with the following:

All grades shall be maintained in the areas to be planted in a true and even condition. The contractor shall be careful not to disturb any of the existing or cut slopes. Where final grades have not been established, the areas shall be finish graded and all surfaces left in an even and compacted condition. The finished grade shall be such that after

planting, the grade shall be flush with adjoining surfaces; positive drainage shall also be maintained.

8-02.3(5)A Seeding Area Preparation

Items 3. and 4. of this section are revised to read:

3. Bring area to a uniform grade and place amended topsoil or amend existing topsoil in accordance with with Standard Plans GSI-01b through GSI-01d. Do not till soil on any slopes at 3(H):1(V) or steeper. Rake to a smooth even grade without low areas that trap water. The finished grade of the soil shall be 1/2 inch below the top of all curbs, junction and valve boxes, walks, driveways and other structures.

4. Compact to provide a reasonably firm but friable seedbed. On slopes at least 20 feet in width from back of walk to construction limits and flatter than 2(H):1(V), create longitudinal depressions at least 2-inch deep by means of tractor track walking; unless otherwise specified or as directed by The Engineer.

8-02.3(5)B Lawn Area Preparation

Item 4. of this section is revised to read:

4. Amend existing topsoil in place or import and place amended topsoil in accordance with Standard Plans GSI-01b through GSI-01d. Rake to a smooth even grade without low areas that trap water and compact with a 50-pound roller. The finished grade of the soil shall be 1/2 inch below the top of all curbs, junction and valve boxes, walks, driveways and other structures.

8-02.3(5)C Planting Area Preparation

Items 5. And 6. of this section is revised to read:

5. Amend existing topsoil in place or import and place amended topsoil in accordance with Standard Plans GSI-01b through GSI-01d. Do not till or place loose topsoil without compaction and stabilization measures on slopes 3H:1V or steeper.

6. The finished grade of the mulch or woodchips shall be 1/2 inch below the top of all curbs, junction and valve boxes, walks, driveways and other structures.

8-02.3(6) Mulch and Amendments

This section is supplemented with the following:

Compost amendment shall be included in Topsoil Type A, B, or C in accordance with Standard Plans GSI-01c and GSI-01d, and compost content is included in the Topsoil quantity.

Existing Topsoil areas shall be amended in place with Compost in accordance with Standard Plan GSI-01b and as shown per Plans.

Soil Amendment General Requirements:

1) Soil Amendment areas, as described in this specification, shall include an amended topsoil layer with a minimum depth of 8 inches

2) Planting beds shall be stabilized with bark or wood chip mulch to the depths specified on the Plans.

3) Sequencing and Scheduling: Do not perform soil preparation work in areas subject to the subsequent work of other sections, unless approved otherwise.

4) Contractor has the option of amending the soils at the "Pre-Approved Rates" as specified in the below Soil Amendment Layer Table, or performing soil amendment at the "Calculated Rates" required to meet the performance criteria specified in the Soil Amendment Layer Table. Contractor shall perform soil characterization testing and have a qualified professional perform the soil amendment calculations as outlined in Section 8-02.3(2)A Roadside Work Plan if choosing to amend soils to meet the "Calculated Rates" performance criteria.

Soil Amendment Cultivation Requirements to amend existing topsoil in place:

1) Scarification Layer:

Scarify or till subgrade to depth of 9-inches (as needed to achieve 12-inches of loosened soil after amendment placed). Entire surface should be disturbed by scarification prior to starting soil amendments. Do not scarify within drip line of existing trees to be retained.

2) Soil Amendment Layer:

A. Planting Beds:	**B. Seeded Areas:**
i. PRE-APPROVED RATE: Place and rototill 3-inches of compost into 5-inches of soil; ii. CALCULATED RATE: Place and rototill calculated amount of compost into depth of soil needed to achieve 8-inches of settled soil at minimum 10% organic content.	i. PRE-APPROVED RATE: Place and rototill 2-inches of compost into 6-inches of soil; ii. CALCULATED RATE: Place and rototill calculated amount of compost into depth of soil needed to achieve 8-inches of settled soil at minimum 5% organic content.
Rake beds to smooth, and remove surface rocks over 2-inch diameter.	Water or roll to compact soil to 85% of maximum.
	Rake to level, and remove surface woody debris and rocks larger than 1- inch diameter.

8-02.3(6)A Compost

This section is supplemented with the following:

The Contractor shall submit the amount of cubic yards of Compost incorporated into the project to the Engineer, including mulch, amendment and as topsoil content. The Contractor shall submit the quantity of Compost per type and supplier.

8-02.3(6)B Fertilizers
This section is supplemented with the following:

Fertilizer shall be supplied and applied per landscaping supplier recommendation or BMP C 120 per the City of Tacoma Stormwater Management Manual, Volume 3, Chapter 1, Section 1.7.

8-02.3(8)C Pruning, Staking, Guying, and Wrapping
This section is supplemented with the following:

Under no circumstances shall tree or shrub pruning be done prior to inspection and approval of plants by the Engineer. Pruning cuts shall only be made to remove dead, damaged, diseased, or broken branches, and in no case shall remove the leader of the tree. If approved, all cuts shall be made in accordance with the ANSI A300 pruning standards at the point of connection with the parent stem, outside of the branch collar, leaving no stubs.

Pruning cuts shall be made in a manner to favor the earliest possible covering of the wound by callus growth. Cuts that produce large (greater than 1.5") wounds or weaken the tree will not be acceptable. All pruning shall produce a clean cut without bruising or tearing the bark.

Evergreens shall not be pruned, except to remove injured branches. The use of pole shears and/or hedge shears for pruning deciduous or evergreen trees will not be permitted. All trimmings and other debris left over from the planting operations shall be collected and disposed of off the site.
All evergreen trees and deciduous trees over 15 feet in height shall be guyed with three wires or cables.

All deciduous and evergreen trees shall be staked the same day of planting.

8-02.3(10) Lawn Installation

8-02.3(10)A Dates and Conditions for Lawn Installation
This section is supplemented with the following:

Where no irrigation system is to be installed, hydroseed lawn shall be installed during the following periods only:

March 1st – June 30th
September 1st - October 25

8-02.3(10)B Lawn Seeding and Sodding
This section is supplemented with the following:

Hydroseeding will shall be the method for lawn installation unless otherwise shown per Plans or as directed by the Engineer. Lawn seeding and sodding shall be in accordance with BMP C 120 per the City of Tacoma Stormwater Management Manual, Volume 3, Chapter 1, Section 1.7. All permanent seeding areas shall be seeded with Low-Growing Turf Seed Mix:

Type of Seed	% by Weight
Dwarf tall fescue	45
Dwarf perennial rye	30
Red fescue	20
Colonial bentgrass	5

The rate of application shall be per manufacturer's recommendation.

Seeding fertilizer shall be per manufacturer's recommendation.

For Sodded Lawns: On sloped areas, the sod strips shall be laid perpendicular to the flow of water.

8-02.3(10)C Lawn Establishment
This section is supplemented with the following:

Lawn that is replaced shall be of the same mixture and grade as the surviving lawn.

8-02.3(11)B Bark or Woodchip Mulch
The third paragraph is revised to read:

The Contractor shall place a uniform non-compacted depth of 3-4 inches inches of Bark or Woodchip Mulch in accordance with the Plans and as directed by the Engineer. Mulch shall not be applied directly to the base of stems and shall be feathered to plant material, leaving trunks, stems, canes, and root collars with gap of 2 inches minimum free of mulch. Bark or Woodchip Mulch shall be placed flush with the top of junction and valve boxes, curbs, sidewalk and pavement edges.

8-02.3(13) Plant Establishment
This section is supplemented with the following:

The Contractor shall maintain the planting areas and all plants planted within the project limits to ensure the resumption and continued growth of the planted material until expiration of the plant warranty period per Special Provisions Section 8-02.3(14).

Maintenance shall include, but not be limited to, labor and materials necessary for removal of foreign, dead, or rejected plant material, maintaining a weed-free condition, watering, and the replacement of all unsatisfactory plant material planted under the contract.

Planting dates for replacement plant material will be approved by the Engineer.

The Contractor shall meet with the Engineer for the purpose of joint inspection of the project once installation has been completed and thereafter on a periodic "as needed" basis as determined by the Engineer, until the expiration of the plant warranty period per Special Provisions Section 8-02.3(14). Thus, plant establishment shall be included in the Contract price per each for the duration of the warranty and the Contract, whichever is the longer duration.

All conditions unsatisfactory to the Engineer shall be corrected by the Contractor within a ten-day period immediately following the inspection. Failure to comply with corrective steps as outlined by the Engineer shall constitute justification of the City of Tacoma to take corrective steps and to deduct all costs thereof from any monies due the Contractor.

The Contractor shall replace all plants stolen or damaged by the acts of others until the physical completion date of the contract.

8-02.3(14) Plant Replacement

This section is supplemented with the following:

The Contractor shall provide the City of Tacoma a one (1) year non pro-rated, full labor and materials warranty for all planted material. The warranty shall cause the Contractor to remove and replace all rejected plant material during the warranty period. The warranty period shall begin at the date of physical completion of the contract and end one calendar year from that date. Thus, plant establishment shall be included in the Contract price per each for the duration of the warranty and the Contract, whichever is the longer duration.

The Contractor shall be responsible for growing or providing enough plants for replacement of all plant material rejected during the warranty period. All rejected plant material shall be replaced at dates approved by the Engineer.

All replacement plants shall be of the same species and quality as the plants they replace. Plants may vary in size reflecting one season of growth should the Contractor elect to hold plant material under nursery conditions for an additional year to serve as replacement plants.

Replacement plants will be subject to the original warranty provision as stated above.

8-02.3(16) Roadside Maintenance Under Construction

This section is supplemented with the following:

Construction Cleanup

Where staining, dust or other material has visibly accumulated on the adjoining buildings and sidewalks as a result of the Contractor's Work, the Contractor shall clean these off as directed by the Engineer. The Contractor shall remove all siltation, spoils, debris and solid waste resulting from the Contractor's activities along the project right of way and dispose of it in accordance with the Contract. The cost for any cleanup described in

Section 8-02 shall be included in the lump sum Contract price for "Roadside Restoration".

Section 8-02.3 is supplemented with the following:

8-02.3(17) Tree Protection

The Contractor shall adhere to the requirements in City of Tacoma Standard Plans LS-08 through LS-11 and the arborist assessment in Appendix A. Tree protection signs can

be found in Appendix 5 of the Urban Forest Manual, which is available for download on the City of Tacoma's website.

8-02.4 Measurement

The first paragraph is revised to read:

Topsoil, mulch, and soil amendments will be measured by the cubic yard in the haul conveyance at the point of delivery when included in the proposal.

The third paragraph is revised to read:

Compost will be measured by the cubic yard in the haul conveyance at the point of delivery. Note that the quantity of Compost incorporated into the project must be reported and submitted to the Engineer in all cases, and where included in other bid items.

The fourth and fifth paragraphs are revised to read:

Seeding, fertilizing, cultivation, weed control, and any preparation of lawn or planting areas are included in other bid items such as "PSIPE__" and "Seeded Lawn Installation".

This section is supplemented with the following:

Irrigation water used to establish vegetation will be considered included in the cost of plants.

No specific unit of measurement shall apply to the lump sum item "Tree Protection".

No specific unit of measurement shall be applied to the lump sum Bid item "Plant Establishment-1 Year".

8-02.5 Payment

The pay item for "PSIPE___" is revised to read

"PSIPE___", per each.

Payment per each for "PSIPE___" shall be full pay for all materials, labor, tools, equipment and supplies necessary for weed control within planting areas, planting area preparation, root barrier, fine grading, planting, cultivating, watering and slow release watering bags, and clean-up for the particular items called for in the Plans and Specifications for the duration of the Contract.

A one (1) year plant warranty shall be included in the unit contract price. Plant establishment shall be included in the Contract price per each for the duration of the warranty and the Contract, whichever is the longer duration.

This section is supplemented with the following:

"Topsoil Type A", per cubic yard

The unit Contract price per cubic yard for “Topsoil Type A” shall be full compensation for producing the topsoil mix, including Compost amendment in accordance with Standard Plan GSI-01d, haul and delivery, placing, grading, and compacting the topsoil in accordance with the Plans and Specifications.

“Topsoil Type B”, per cubic yard

The unit Contract price per cubic yard for “Topsoil Type B” shall be full compensation for excavating, hauling, and stockpiling the topsoil, and placing, tilling in Compost amendment as required in accordance with Standard Plan GSI-01c, fine grading and compacting the topsoil in accordance with the Plans and Specifications.

“Topsoil Type C”, per cubic yard

The unit Contract price per cubic yard for “Topsoil Type C” shall be full compensation for excavating, hauling, delivering, and stockpiling the topsoil, and placing, tilling in Compost amendment as required in accordance with Standard Plan GSI-01c, fine grading and compacting the topsoil in accordance with the Plans and Specifications.

The unit contract price per cubic yard for “__ Compost” shall be full pay for furnishing and spreading the compost onto the existing topsoil.

“Fine Compost”, per cubic yard.

“Medium Compost”, per cubic yard.

“Coarse Compost”, per cubic yard.

“Soil Amendment”, per cubic yard

The unit contract price per cubic yard for “Soil Amendment” shall be full pay for all labor, material and equipment necessary to complete the Work as specified, which includes scarifying subgrade (where applicable), fine grading, furnishing, hauling, placing, spreading, processing, cultivating, and incorporating the soil amendment into the existing soil in accordance with Standard Plan GSI-01b.

Any sample collection, testing, or calculations required herein as part of “Soil Amendment” shall be included in the applicable soil amendment unit cost and shall not be measured for payment.

“Wood Chip Mulch”, per cubic yard

The unit Contract price per cubic yard for “Wood Chip Mulch” shall be full pay for all labor, materials, tools, and equipment necessary to complete the Work as specified, which includes hauling, spreading the mulch onto the existing soil.

“Roadside Restoration”, lump sum.

The lump sum payment for “Roadside Restoration” shall be full payment for all costs incurred to carry out the requirements of Section 8-02 and any Roadside Restoration

items not specifically included in other bid items, including but not limited to Construction Cleanup, grass sod and seeding, wood chip mulch, watering, planting area preparation, soil amendment, grading, cultivating, and gravel replacement.

END OF SECTION

8-04 CURBS, GUTTERS, AND SPILLWAYS (*****)

8-04.3 Construction Requirements

This Section is supplemented with the following:

Soil excavated in connection with this Work shall be included in the measurements and payments for "Roadway Excavation ____ Incl. Haul" in accordance with Section 2-03, Roadway Excavation and Embankment.

The Contractor shall haul and dispose of all soil material excavated from the Project site in accordance with Special Provisions Sections 2-03, and 2-17.

The Contractor shall haul and dispose of all non-contaminated soil material excavated from the Project site in accordance with the Contract, Plans and Specifications to Corliss Resources gravel pits or other approved licensed disposal facility in accordance with Special Provisions Section 2-17. <u>The Contractor shall include the cost of the disposal fees in the Contract unit price per cubic yard for "Roadway Excavation of Non-contaminated Material, Incl. Haul ".</u>

The Contractor shall haul and dispose of all contaminated soil material excavated from the Project site in accordance with the Contract, Plans, and Specifications to LRI Landfill, located at 30919 Meridian Street East, Graham, WA 98338 in accordance with Special Provisions Section 2-17. <u>The Contractor shall not include the cost of the disposal fees at LRI in any bid item. The City of Tacoma will pay the disposal fees directly to LRI.</u>

8-04.3(1) Cement Concrete Curbs, Gutters, and Spillways

The first paragraph is revised to read:

Cement concrete curb, curb and gutters, gutters, and spillways shall be constructed with air entrained concrete Class 3000 conforming to the requirements of Section 6-02.

The first sentence in the fourth paragraph is revised to read:

Expansion joints in the Curb or Curb and Gutter shall be spaced at 15-foot intervals; and shall be located at both ends of all curb returns, drainage structures, bridges, and cold joints with existing curbs and gutters.

Section 8-04.3(1) Cement Concrete Curbs, Gutters, and Spillways is supplemented with the following:

The curb foundation shall be a minimum compacted thickness of 6 inches crushed surfacing, extending 1 foot from the back of curb. The crushed surfacing foundation shall be compacted to a minimum 95% of maximum density in accordance with Section 4-04.3. Recycled Concrete Aggregate can be used for curb foundation in stead of crushed surfacing. Compaction testing shall be in accordance with Section 4-04.3(5).

8-04.3(1)C Integral Cement Concrete Curb

When integral curb is being constructed with the pavement, fresh concrete for the integral curb shall be placed at such time as will enable the top section of the curb to be consolidated, finished, and bonded to the pavement slab while the concrete is plastic.

Where curb is not being placed integral with the pavement slab, reinforcing steel dowels shall be placed in the base section for the curb in accordance with the standard drawing.

Section 8-04.3 Construction Requirements is supplemented with the following:

8-04.3(6) Cold Weather Work

The following additional requirements for placing concrete shall be in effect from November 1 to April 1:

1. The Engineer shall be notified at least 24 hours prior to placement of concrete.
2. All concrete placement shall be completed no later than 2:00 p.m. each day.
3. Where forms have been placed and the subgrade has been subjected to frost, no concrete shall be placed until the ground is completely thawed. At that time, the forms shall be adjusted and subgrade repaired as determined by the Engineer.

8-04.5 Payment
This section is supplemented with the following:

"Cement Conc. Traffic Curb and Gutter", per linear foot

The unit contract price per linear foot for "Cement Conc. Traffic Curb and Gutter" shall be full pay for all labor, tools, equipment, and materials required to construct all types of concrete curbs, curbs and gutters according to the Plans and these Specifications.

Excavation required for the construction of any curb type shall be paid for under the unit contract price for "Roadway Excavation____, Incl. Haul".

END OF SECTION

8-06 CEMENT CONCRETE DRIVEWAY ENTRANCES (******)

8-06.3 Construction Requirements

The first paragraph is revised to read:

Cement concrete driveway approaches shall be constructed with air entrained concrete Class 3000 conforming to the requirements of Section 6-02 or Portland Cement Concrete Pavement conforming to the requirements of Section 5-05.

This Section is supplemented with the following:

Soil excavated in connection with this Work shall be included in the measurements and payments for "Roadway Excavation ____ Incl. Haul" in accordance with Section 2-03, Roadway Excavation and Embankment.

The Contractor shall haul and dispose of all soil material excavated from the Project site in accordance with Special Provisions Sections 2-03, and 2-17.

The Contractor shall haul and dispose of all contaminated soil material excavated from the Project site in accordance with the Contract, Plans, and Specifications to LRI Landfill, located at 30919 Meridian Street East, Graham, WA 98338 in accordance with Special Provisions Section 2-17. <u>The Contractor shall not include the cost of the disposal fees at LRI in any bid item. The City of Tacoma will pay the disposal fees directly to LRI.</u>

This section is supplemented with the following sub-section:

8-06.3(1) Cold Weather Work

The following additional requirements for placing concrete shall be in effect from November 1 to April 1:

1. The Engineer shall be notified at least 24 hours prior to placement of concrete.
2. All concrete placement shall be completed no later than 2:00 p.m. each day.
3. Where forms have been placed and the subgrade has been subjected to frost, no concrete shall be placed until the ground is completely thawed. At that time, the forms shall be adjusted and subgrade repaired as determined by the Engineer.

8-06.5 Payment

This section is revised to read:

Payment will be made in accordance with Section 1-04.1, for the following Bid item: "Cement Conc. Driveway Entrance", per square yard.

The unit contract price per square yard for "Cement Conc. Driveway Entrance" shall be full pay for all labor, tools, equipment, and materials required to construct concrete driveways in segments, and installing and removing a Temporary Driveway Access shall be included. All types of concrete driveway entrances are included in this bid item.

Excavation required for the construction of the driveway entrance shall be paid for under the unit contract price for “Roadway Excavation____, Incl. Haul”.

END OF SECTION

8-14 CEMENT CONCRETE SIDEWALKS
(******)

8-14.3 Construction Requirements
This Section is supplemented with the following:

Soil excavated in connection with this Work shall be included in the measurements and payments for "Roadway Excavation ____ Incl. Haul" in accordance with Section 2-03, Roadway Excavation and Embankment.

The Contractor shall haul and dispose of all soil material excavated from the Project site in accordance with Special Provisions Sections 2-03, and 2-17.

The Contractor shall haul and dispose of all contaminated soil material excavated from the Project site in accordance with the Contract, Plans, and Specifications to LRI Landfill, located at 30919 Meridian Street East, Graham, WA 98338 in accordance with Special Provisions Section 2-17. <u>The Contractor shall not include the cost of the disposal fees at LRI in any bid item. The City of Tacoma will pay the disposal fees directly to LRI.</u>

8-14.3(3) Placing and Finishing Concrete
The fourth paragraph is revised to read:

Curb ramps shall be of the type specified in the Plans. The detectable warning pattern shall have the truncated dome shape shown in the Standard Plans.

8-14.3(4) Curing
The second sentence is revised to read:

Curing shall be in accordance with Section 5-05.3(13).

Section 8-14 is supplemented with the following:

8-14.3(20) Cold Weather Work

The following additional requirements for placing concrete shall be in effect from November 1 to April 1:

4. The Engineer shall be notified at least 24 hours prior to placement of concrete.
5. All concrete placement shall be completed no later than 2:00 p.m. each day.
6. Where forms have been placed and the subgrade has been subjected to frost, no concrete shall be placed until the ground is completely thawed. At that time, the forms shall be adjusted and subgrade repaired as determined by the Engineer.

8-14.3(21) Thickened Edge for Sidewalk

Thickened edge shall be constructed in accordance with the standard plan.

8-14.5 Payment
The pay item "Cement Conc. Sidewalk" is supplemented with the following:

All additional costs related to the construction of thickened edges shall be included in the unit contract cost for “Cement Conc. Sidewalk”.

(******)
All additional costs to furnish and install cast-in-place detectable warning surfaces per Plans shall be included in the Contract unit price per square yard for “Cement Conc. Sidewalk”.

The sixth paragraph is revised to read:

Excavation required for the construction of the sidewalk shall be paid for under the unit contract price for “Roadway Excavation____, Incl. Haul”.

END OF SECTION

8-20 ILLUMINATION, TRAFFIC SIGNAL SYSTEMS, AND ELECTRICAL (******)

The City of Tacoma will supply the conduit and junction box materials shown on the Plans. The Contractor shall collect these materials as directed by the Engineer and haul the materials to the jobsite. The Contractor shall install these materials per Plans and Specifications.

8-20.3 Construction Requirements

8-20.3(1) General

This section is supplemented with the following:

The Contractor shall call 24 hours prior for inspection before covering any underground conduit, prior to installing any detection loops, or placing concrete for foundations. For inspections, notify Traffic Signal/Streetlighting at (253) 591-5287.

Work shall be sequenced such that after the new signal is placed in operation, the Contractor shall remove any equipment not required for the operation of the new signal. The Contractor shall remove the old vehicle and pedestrian signal heads immediately after the new system is operational.

For new signals, the contractor shall provide a Portable Message Change Sign in each direction and operate the PMCS for one week before, and one week after activating the new signal. This work shall be paid for in accordance with Section 1-10.

Uniformed police officers shall be provided by the Contractor to direct traffic at any time the signal is not in normal operation. This work shall be paid for in accordance with Section 1-10.

The following existing and temporary equipment shall be deconstructed/removed by the Contractor and delivered to the City of Tacoma Signal/Streetlight Shop located at 3401A South Orchard Street. Care shall be exercised in removing and salvaging the equipment. Any equipment damaged during removal, hauling, and stockpiling shall be repaired or replaced by the Contractor at no expense to the City.

- All signal heads and mounting hardware
- Flashing beacons, and flasher control panel
- Steel poles, mast arms, and hardware
- Aluminum poles, mast arms, and hardware
- Controller cabinets and all internal hardware and wiring
- Vehicle detection systems, including video, microwave, and infrared systems, and associated hardware
- All Opticom equipment or other preemption and priority equipment.
- LED luminaries, LED retrofit kits, and LED lamps
- Ornamental/Decorative fixtures and poles/posts
- Pedestrian signals, poles, and pushbuttons.
- Signs, brackets, and hardware
- Locking junction box security lids, security bolts, and all other wire theft deterrent security hardware

All other equipment shall be removed of and disposed of by the Contractor, including but not limited to the following:

- Wood poles
- All wiring outside of the controller cabinet
- Loops
- Non-LED cobra-head fixtures

8-20.3(5) Conduit

8-20.3(5)A General

This section is supplemented with the following:

As soon as the mandrel has been pulled through, both ends of the conduit shall be sealed in an approved manner. Location wire, in conformance with 9-29, shall be installed in <u>all</u> empty conduits. At least three (3) feet of the location wire shall be neatly coiled and secured to the conduit in the same manner as is shown in Washington State Department of Transportation Standard Plan J-28.70-01, Details A and B.

8-20.3(5)B Conduit Type

This section is supplemented with the following:

Conduit shall be Schedule 80 PVC and will be supplied by the City of Tacoma.

8-20.3(5)E1 Open Trenching

Subsection 5 is revised to read:

5. Trenches located within the paved roadway shall be backfilled with 3 inches of sand over the conduit, followed by material meeting the requirements of Section 9-03.12(3). Compaction shall be in conformance with Section 2-09.3(1)E. All street cuts shall be repaired in accordance with the standard plans.

This section is supplemented with the following new Subsections:

7. Where multiple conduits are installed in the same trench, the trench shall be of sufficient width to accommodate all conduit, with a minimum 3-inch separation between each conduit, and a minimum clearance of 1-inch on the sides of the trench. When conduit is laid horizontal to one another, the conduit shall be laid at the same elevation, parallel with one another. When conduit is laid vertically in the same trench, conduit spacers shall be used to maintain the 3-inch separation. Spacers shall be installed in accordance with the manufacturer's recommendations for conduit of that size and type. Additional spacers shall be required where the supported conduit is sagging more than 20% of the nominal diameter of the conduit.
8. In all conduit trenches, metallic, detectible, utility warning tape shall be placed at twelve (12) inches below final grade.

8-20.3(6) Junction Boxes, Cable Vaults, and Pull boxes
(******)
This section is supplemented with the following:
The City of Tacoma will supply all junction boxes shown per Plans. The Contractor shall collect the junction boxes and haul these to the jobsite as directed by the Engineer. The Contractor shall install the junction boxes in accordance with the Plans and Specifications.

Adjacent junction boxes shall be separated by a minimum of three-inches.

Concrete meeting the requirements of 6-02.3(2)B shall be placed surrounding all junction boxes except as otherwise provided for below. Concrete shall be flush with the top of the junction box and the adjacent improvements. Concrete shall be cast in place. Junction boxes shall be secured with the concrete border as follows:

1. When the junction box is located within a concrete or asphalt section and is located a minimum of 12-inches from the edge of the section, a concrete border will not be required.
2. Where junction boxes are located within 12-inches from the edge of the concrete or asphalt section, the junction box shall secured on all sides with a minimum 12-inch wide, 6-inch deep concrete section. Concrete shall be finished in the same manner as the adjacent concrete where applicable.
3. Where junction boxes are located within a planter strip, a landscaped area, or other non-hardened surface, the junction box shall be bordered on all sides with a minimum 6-inch wide, 12-inch deep concrete section flush with the top of the junction box.

8-20.3(17)B "As Built" Plans
This section is supplemented with the following:

These drawings shall show the routing of all underground conduits. The locations of the conduit shall be dimensioned with a precision and accuracy of 1 foot.

8-20.4 Measurement
This section is revised to read:

"Install Conduit, 2-inch Dia. PVC Schedule 80, with Pull Line" shall be measured per linear foot installed per Plans and Specifications.

"Install Type 1 Junction Box" shall be measured per each installed per Plans and Specifications.

8-20.5 Payment
This section is supplemented with the following:

"Install Conduit, 2-inch Dia. PVC Schedule 80, with Pull Line", per linear foot

The Contract unit price per linear foot for "Install Conduit, 2-inch Dia. PVC Schedule 80, with Pull Line" shall be full compensation to load, haul, deliver and install the 2-inch diameter PVC Schedule 80 conduit with pull line in accordance with the Plans and Specifications.

"Install Type 1 Junction Box", per each

The Contract unit price per each for "Install Type 1 Junction Box" shall be full compensation to load, haul, deliver and install the Type 1 Junction Box in accordance with the Plans and Specifications.

END OF SECTION

8-40 POWER UTILITY WORK
(******)

8-40.1 Description

This work shall consist of furnishing and installing power utility vaults, related structure excavation and trench excavation, installation of power duct banks with pull lines, and flowable thermal backfill placement (FTB). The City of Tacoma Power Utility crews shall install power cables and wiring in coordination with the Contractor.

8-40.2 Materials

Material Standards are according to Tacoma Power Standards. Applicable standards are included in the Appendix of these Contract Provisions.

Power Vaults shall be installed in accordance with C-UG-1500. The Vaults available from some local suppliers may be slightly bigger in size, and can be 5000 lbs heavier. The Contractor shall be responsible to investigate the size and weight of vault components and provide shop drawings at least 5 days prior to the start of installation. The City of Tacoma may make adjustments to vault detail sheets for excavation limits and foundation elevations upon receiving shop drawings.

Electronic Tracer Ball: 3M EMS 1402 Electronic Tracer Ball or Tacoma Power approved equivalent.

8-40.3 Construction Requirements

Tacoma Power Utility standards as included in the appendix shall govern. Otherwise trench excavation, structure excavation, and installation of conduits and structures shall be in accordance with Sections 2-09, 7-05, and 7-08, 8-20, 9-29 while Section 8-40 shall govern.

Power Duct banks, Power Vaults, and trench excavation shall be in accordance with the Plans and Specifications, and Tacoma Power Utility standards. All conduits shall be installed with pull lines.

Vaults:

The Contractor shall install Power Utility Vaults in accordance with the Plans, Tacoma Power Standards, and these Special Provisions. Construct a 8-inch compacted thickness, level foundation pad under the entire vault, extending 1-foot out from the vault base. The foundation pad shall be constructed with crushed surfacing top course (CSTC) compacted to at least 95% of maximum density in accordance with Section 4-04.3. The Contractor shall adjust the lids and covers to finished grade, and install a single 2” sump line at each vault from existing knockout through the new curb line to empty to the street.

Structure Excavation, Vaults, Trenches, and Duct Banks:

The Contractor shall haul and dispose of all contaminated soil material excavated from the Project site in accordance with the Contract, Plans, and Specifications to LRI

Landfill, located at 30919 Meridian Street East, Graham, WA 98338 in accordance with Special Provisions Section 2-17.

Structure Excavation Class B horizontal paylimits shall coincide with duct bank dimensions including the CDF or FTB volume. The lower paylimits shall be the bottom of CSTC foundation under a vault and coincide with the bottom of a duct bank including the CDF or FTB volume. The upper trench excavation pay limits shall be the existing ground surface or the bottom of any sidewalk or other pavement removal.

Structure Excavation for vaults shall be in accordance with Sections 2-09, and shall be included in the quantity for "Structure Excavation Class B Incl. Haul___", per cubic yard. **Horizontal paylimits for Structure Excavation for Vaults shall be at 2 foot horizontal distance from the outside of the vault wall**.

Power duct banks shall be encased in Flowable Thermal Backfill (FTB) or CDF to a depth in accordance with the Plans and these Special Provisions. The remainder of the back fill on top of the FTB shall be crushed surfacing top course (CSTC). Install an Electronic Tracer Ball in the topmost, centermost duct at locations where newly built conduit banks do not terminate into a vault.

8-40.4 Measurement

Power Utility Vault shall be measured per each furnished and installed in accordance with the Plans and Specifications, and Tacoma Power Utility standards.

"___Conduit Bank " shall be measured per linear foot along the alignment of the power conduit bank trench.

Flowable Thermal Backfill (FTB) and CDF shall be included in the measurement per linear foot for "___Conduit Bank".

Electronic Tracer Ball shall be measured per each tracer ball installed in accordance with these Special Provisions and TPU Power Standards.

"Structure Excavation Class B Incl. Haul___" shall be measured per cubic yard in place before excavation to the paylimits per Section 8-40.3.

8-40.5 Payment

"Power Utility ___Vault" per Each

The Contract price per each for Power Utility ___Vault shall be full compensation for all labor, tools, equipment, and materials to furnish and install the complete vault, including single 2" sump line if applicable, and adjusting the lids and covers to finished grade all in accordance with the Plans and Specifications.

"___Conduit Bank", per linear foot

The Contract price per linear foot for "___Conduit Bank" shall be full compensation for all labor, tools, equipment, and materials to install power conduit bank including FTB in accordance with TPU Power Standards, the Plans, and Specifications.

"Section A Conduit Bank", per linear foot

"Section B Conduit Bank", per linear foot

"Section C Conduit Bank", per linear foot

"Section D Conduit Bank", per linear foot

"Section E Conduit Bank", per linear foot

"Section F Conduit Bank", per linear foot

"Section G Conduit Bank", per linear foot

"Section H Conduit Bank", per linear foot

"Section I Conduit Bank", per linear foot

"Electronic Tracer Ball" per Each

The Contract price per each for Electronic Tracer Ball shall be full compensation for all labor, tools, equipment, and materials to furnish and install the electronic tracer ball.

END OF SECTION

9-03 AGGREGATES
(September 20, 2018 Tacoma GSP)

9-03.1 Aggregates for Portland Cement Concrete

9-03.1(1) General Requirements
(June 16, 2016 Tacoma GSP)
The seventh paragraph is deleted

9-03.6 Vacant
(Jun 16, 2016 Tacoma GSP)
This section, including the title, is revised to read:

9-03.6 Aggregates for Asphalt Treated Base (ATB)

9-03.6(1) General Requirements

Aggregates for asphalt treated base shall be manufactured from ledge rock, talus, or gravel, in accordance with the provisions of Section 3-01 that meet the following test requirements:

Los Angeles Wear, 500 Rev. 30% max.
Degradation Factor 15 min.

9-03.6(2) Grading

Aggregates for asphalt treated base shall meet the following requirements for grading:

Sieve Size	Percent Passing
2″	100
½″	56-100
No. 4	32-72
No. 10	22-57
No. 40	8-32
No. 200	2.0-9.0

All percentages are by weight.

9-03.6(3) Test Requirements

When the aggregates are combined within the limits set forth in Section 9-03.6(2) and mixed in the laboratory with the designated grade of asphalt, the mixture shall be capable of meeting the following test values:

% of Theoretical Maximum Specific Gravity (GMM) (approximate) 93@ 100 gyrations
AASHTO T324, WSDOT TM T718 or ASTM D3625
Pass
(Acceptable anti-strip evaluation tests)

The sand equivalent value of the mineral aggregate for asphalt treated base (ATB) shall not be less than 35.

9-03.8 Aggregates for Hot Mix Asphalt
(March 9, 2016 APWA GSP)
Supplement section 9-03.8 with the following:

Aggregates for Porous Hot Mix Asphalt/Porous Warm Mix Asphalt (PHMA/PWMA)
General Requirements

Aggregates for Porous Hot Mix Asphalt (PHMA) or Porous Warm Mix Asphalt (PWMA) shall be manufactured from ledge rock, talus, or gravel, in accordance with the provisions of Section 3-01 that meet the following test requirements:

Los Angeles Wear, 500 Rev. 30% max.
Degradation Factor 15 min.

Grading
Aggregates for PHMA/PWMA shall meet the following requirements for grading:

Sieve Size	Percent Passing*
¾" square	100
½" square	90 - 100
⅜" square	55 - 90
U.S. No. 4	10 - 40
U.S. No. 8	0 - 20
U.S No. 40	0 - 13
U.S. No. 200	0 - 5

* All percentages are by weight.

The aggregate for PHMA/PWMA shall consist of crushed stone with a percent fracture greater than 90% on two faces on the No. 4 sieve and above, and shall be tested in accordance with the field operating procedures for AASHTO T 335.

9-03.12 Gravel Backfill
Add the following new Section:

9-03.12(10) Pea Gravel
(September 20, 2018 Tacoma GSP)

Sieve Size	Percent Passing*
¾" square	100
⅜" square	95-100
U.S. No. 8	0 - 10
U.S. No. 200	0 - 3

Sand Equivalent 35 Minimum
* All percentages are by weight

9-03.21 Recycled Material

9-03.21(1) General Requirements
(Jun 16, 2016 Tacoma GSP)
This section is supplemented with the following:

Recycled Concrete Aggregate shall not be permitted for use as pipe zone backfill, backfill above pipe zone, and extra excavation area backfill material.

END OF SECTION

9-14 EROSION CONTROL AND ROADSIDE PLANTING
(May 15, 2023 Tacoma GSP)

9-14.2 Topsoil

9-14.2(1) Topsoil Type A
This Section is revised to read:

Topsoil Type A shall meet the following requirements:

- The source Topsoil shall be friable and loamy, and can contain loam, sandy loam, silty loam, clay loam, or a sandy clay loam.
- Topsoil Type A shall be organically amended with Compost before delivery to the job site, and the Compost shall conform to Special Provision 9-14.5(8).
- The amended Topsoil shall have minimum 10% organic matter for use in planting beds; typically containing 40% compost.
- The amended Topsoil shall have minimum 5% organic matter for grass seeding and lawn areas; typically containing 25% compost.
- The pH shall be between 6.0 and 8.0.
- The amended Topsoil shall have maximum 25% passing the #200 sieve.
- The amended Topsoil shall not exhibit visible water or dust during handling.

9-14.5(8) Compost
This Section is supplemented with the following:

The Compost supplier shall produce Compost from a certified composting facility. Certified compost facilities are included on a list and an interactive map available on the Washington State Department of Ecology Composting website:

https://ecology.wa.gov/Waste-Toxics/Reducing-recycling-waste/Organic-materials/Managing-organics-compost

Compost shall meet the definition for “composted material” per WAC 173-350-100 and comply with standards in WAC 173-350-220, except the feedstock may contain bio solids or manure feed stocks. When feedstock material is sourced in a pest quarantine area the owners of the organic waste shall comply with WAC 16-470-124 including processing conditions and heat treatments for pest control; and shall obtain a special permit from the Washington State Department of Agriculture.

City of Tacoma TAGRO Potting Soil Mix, which is derived from the municipal solid waste compost program, can be used as Compost or shall be added as part of the Compost mix for landscaping and roadside restoration, including topsoil amendment and topsoil mix content.

Compost shall meet the following additional criteria:

- No visible water or dust during handling
- 40% minimum to 65% maximum organic content per TMECC
- Carbon to Nitrogen ratio below 25:1, or up to 35:1 for plants native to Puget Sound lowland region, or up to 40% as a coarse compost for surface mulch only.

For use as Topsoil amendment in BMP L613, Post Construction Soil Quality and Depth, Compost shall meet the following additional criteria:

- The Compost must originate from a feedstock that contains compost derived from municipal solid waste compost programs, such as TAGRO. Facilities that produce compost from post-consumer food waste, yard debris, and food scraps can be found on the Department of Ecology WA composting facilities and material types table.
- The compost must originate from a feedstock that has a minimum of 65% recycled plant waste comprised of “yard debris”, “crop residues”, and “bulking agents”. A maximum of 35% post-consumer food waste can be substituted for recycled plant waste. The Compost may have up to 35% bio solids or manure. Percentages are specified by volume. Quoted terms are defined in WAC 173-350-100.
- Stable and mature per TMECC, meaning the Compost tests results show low oxygen use and low CO2 generation, and as capable of supporting plant growth.
- Use a Fine Compost per gradation in Section 9-14.5(8).
- Refer to Standard Plan series GSI-01b through GSI-01d for application.

END OF SECTION

9-29 ILLUMINATION, SIGNALS, ELECTRICAL (******)

9-29.1(6) Detectable Underground Warning Tape

This section is supplemented with the following:

For electrical circuits detectable underground warning tape shall be high visibility red, with continuous legend of “Caution Electric Line Buried Below” or equal. The warning tape shall be polyethylene with a metallic backing. The polyethylene shall be a minimum 3 inches wide, 4 mils thick.

9-29.2 Junction Boxes, Cable Vaults and Pull Boxes

Unless otherwise specified, all junction boxes containing illumination and signal control cable shall be Type 1, Standard Duty with alternate 2 locking lid per state standard plan J-40.10-02.

9-29.2(4) Cover Markings

The second paragraph of this section is revised to read:

Covers shall be marked or embossed with “LT” for boxes containing illumination circuits.

END OF SECTION

END OF SPECIAL PROVISIONS

APPENDIX A

CITY OF TACOMA

and

WSDOT STANDARD PLANS

***** Note Standard plans and websites provided below are for contractor convenience. Additional standard plans may be required to construct the project. *****

COT Standard Plans Website:
https://www.cityoftacoma.org/government/city_departments/public_works/engineering/standard_plans_and_g_i_s_typical_details

WSDOT Standard Plans Website:
https://wsdot.wa.gov/engineering-standards/all-manuals-and-standards/standard-plans

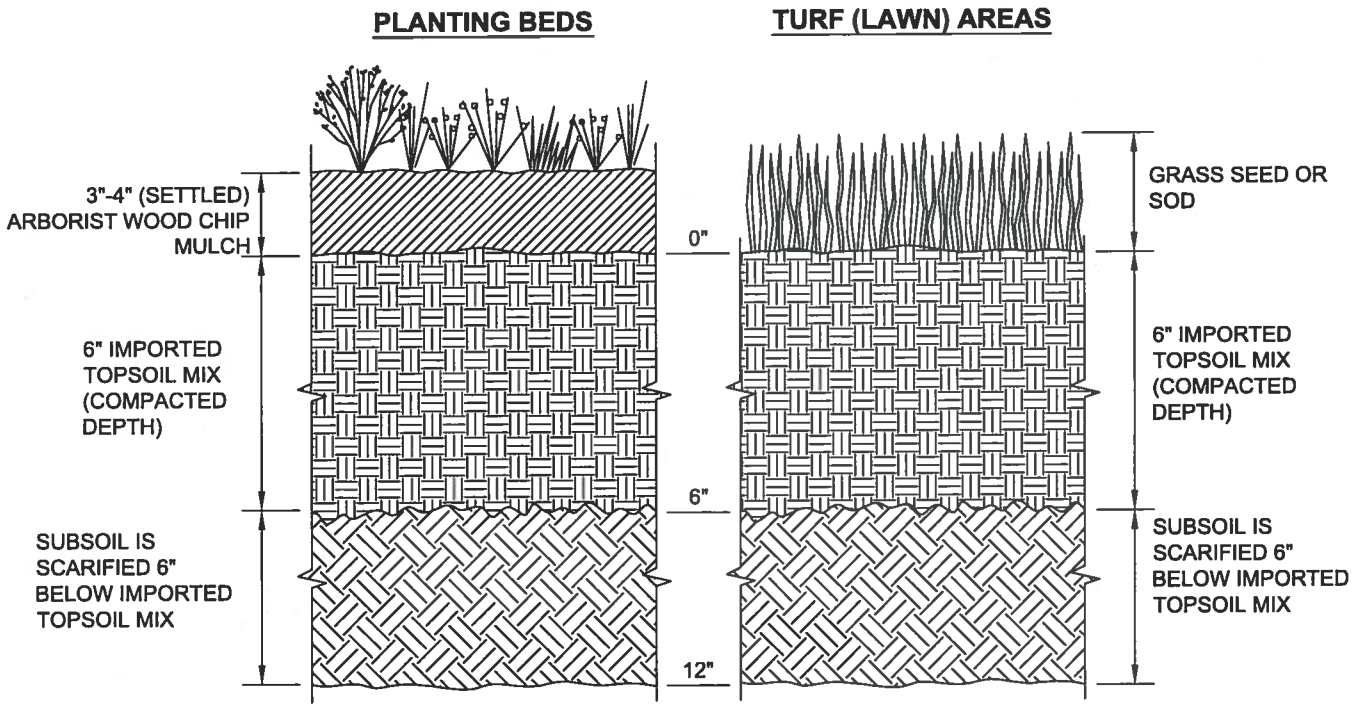

OPTION 4: Import topsoil mix of sufficient organic content and depth to meet the requirements. All soil areas disturbed or compacted during construction, and not covered by buildings or pavement, shall be restored as described below.	
Scarification: scarify or till subgrade in two direction to 6 inches depth. Entire surface shall be disturbed by scarification. Do not scarify within drip line of existing trees to be retained.	
A. Planting Beds	B. Turf (Lawn) Areas
Use imported topsoil mix containing 10% organic matter (typically around 40% compost). Soil portion must be sand or sandy loam as defined by the USDA. Place 3 inches of imported topsoil mix on surface and till into 2 inches of soil. Place 3 inches of imported topsoil mix on surface and till into 2 inches of soil. Place second lift of 3 inches topsoil mix on surface.	Use imported topsoil mix containing 5% organic matter (typically around 25% compost). Soil portion must be sand or sandy loam as defined by the USDA. Place 3 inches of imported topsoil mix on surface and till into 2 inches of soil. Place second lift of 3 inches topsoil mix on surface.
Rake beds to smooth and remove surface rocks larger than 2 inches diameter. Mulch planting beds with 3" - 4" of organic mulch or stockpiled duff.	Water or roll to compact to 85% of maximum dry density. Rake to level and remove surface rocks larger than 1 inch diameter.
Setbacks: to prevent uneven settling, do not compost-amend soils within 3 feet on center of utility infrastructure (poles, vaults, meters etc.). Within one foot of pavement edge, curbs and sidewalks; soil should be compacted to approximately 90% max. modified proctor density (ASTM D1557) to ensure a firm surface. Do not compact within tree protection zone. See Std. Plans LS-08 and LS-09.	
See SWMM BMP L613 for additional information.	

REVIEWED BY		APPROVED FOR PUBLICATION	CITY OF TACOMA
DCS	GMS		BMP L613 POST CONSTRUCTION SOIL QUALITY AND DEPTH
PUBLIC WORKS	ENVIRONMENTAL SERVICES		OPTION 4 - IMPORTED TOPSOIL
NA	NA		
TACOMA POWER	TACOMA WATER	CITY ENGINEER / DATE 4/21/16	STANDARD PLAN NO. GSI-01d

KURTIS DEAN KINGSOLVER STATE OF WASHINGTON 31229 REGISTERED PROFESSIONAL ENGINEER

NOTES:

1. Planting includes removal of stakes one year after installation.
2. Shape soil surface to provide 4' dia watering ring.
3. Tree clearance shall be per STD PLAN LS-02.
4. See STD PLAN LS-03 for tree well dimension detail.
5. Root barriers shall be an injection molded or extruded modular component made of high density polypropylene or polyethylene plastic. 18" depth x 10' length root barrier is required along edge of roadways, curbs, driveways, trails, sidewalks, or other structures where root ball is within 4 feet. install root barrier for newly planted trees only.

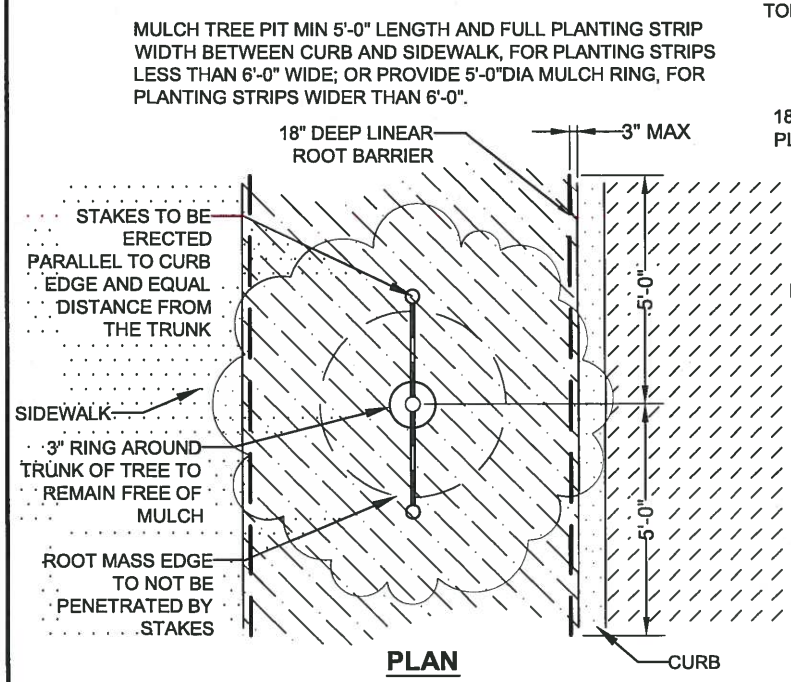

PLAN

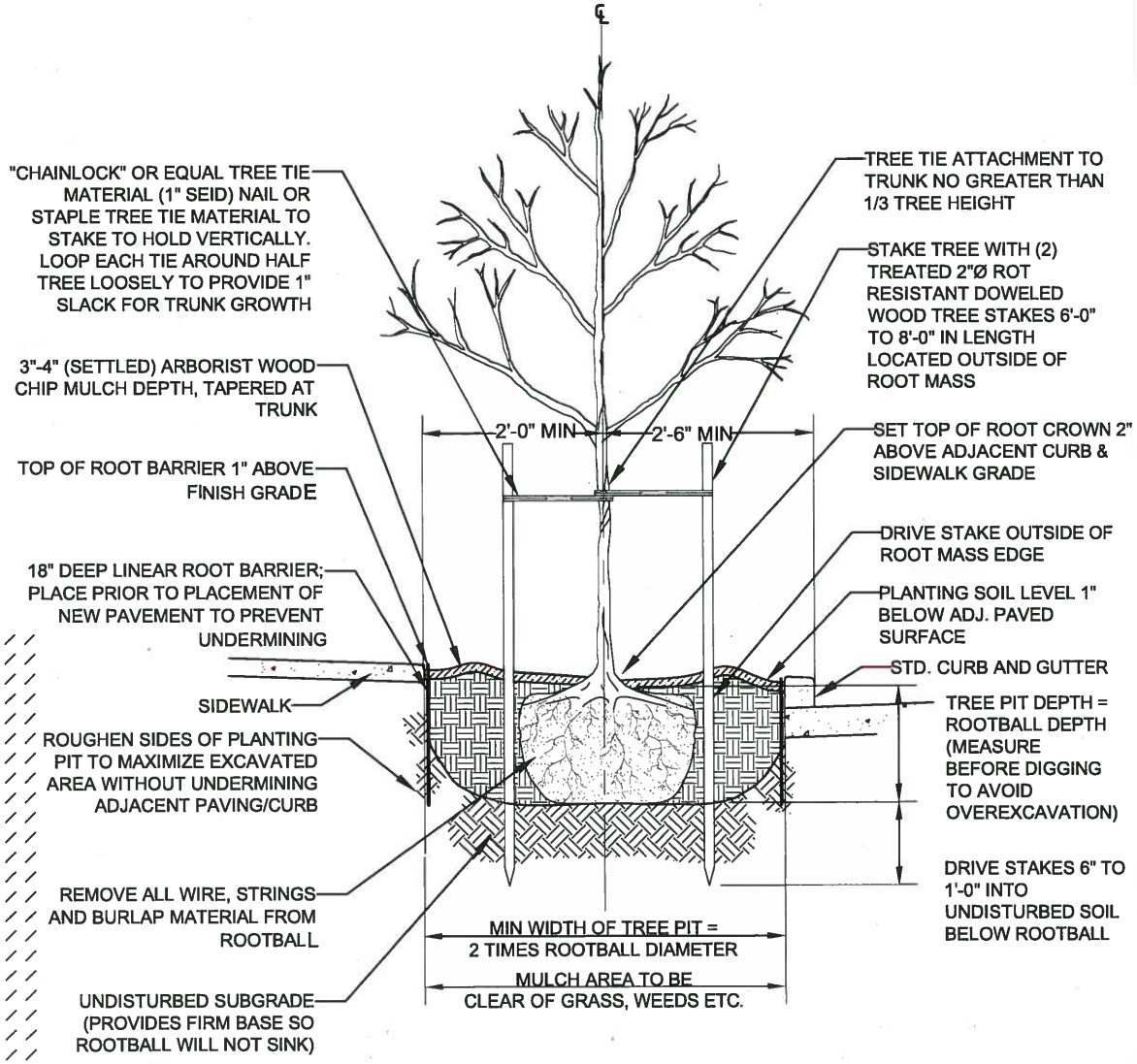

ELEVATION

CITY OF TACOMA **DEPARTMENT OF PUBLIC WORKS**	**APPROVED FOR PUBLICATION** CITY ENGINEER — DATE 2/4/15	**STREET TREE PLANTING** **STANDARD PLAN NO. LS-01**

NOTES:

1. Street trees shall have a trunk free of branches up to the height listed below when planted:
   A. Small trees, whose mature height is 15 to 25 feet, shall have a trunk free of branches up to a minimum of 4 feet.
   B. Conifer/evergreen trees shall have a trunk free of branches up to a minimum of 2 feet.
   C. Trees with ascending branches (examples - Ulmus Americana and Zelkova Serrata) may be branched 1 foot or More below the standard height and still provide proper clearance when planted.
   D. All other trees shall have a trunk free of branches up to a minimum of 6 feet.
2. Street trees shall not be less than 1.5 inches in caliper for broadleaf trees or 6 feet in height for evergreen/conifers.
3. For minimum unpaved planting area dimensions refer to tree well dimension detail, STANDARD PLAN NO. LS-03.
4. The accessible portion of the sidewalk must be a minimum of 5 feet and be free of obstructions.

MINIMUM TREE SETBACKS (AT PLANTING):

Centerline of tree to centerline of:	
Street corner (extension of outside face of curb)	25'-0"
Stop or yield sign	25'-0"
Utility pole	15'-0"
Other traffic control sign	5'-0"
Centerline of tree to edge of:	
Driveway	5'-0"
Face of curb	2'-6"
Pavement	2'-0"
Edge of tree to edge of:	
Utility worker access lids	5'-0"
Gas shutoff valves	5'-0"
Fire hydrant & hydrant branch	10'-0"
Water meter, water service & water mains	5'-0"
Storm inlet, cb, & manhole	5'-0"
Storm/sanitary service connections & mains	5'-0"

MINIMUM TREE CLEARANCES (AT MATURITY):

Lowest branch to surface of:	
Streets	14'-0"
Sidewalks	8'-0"

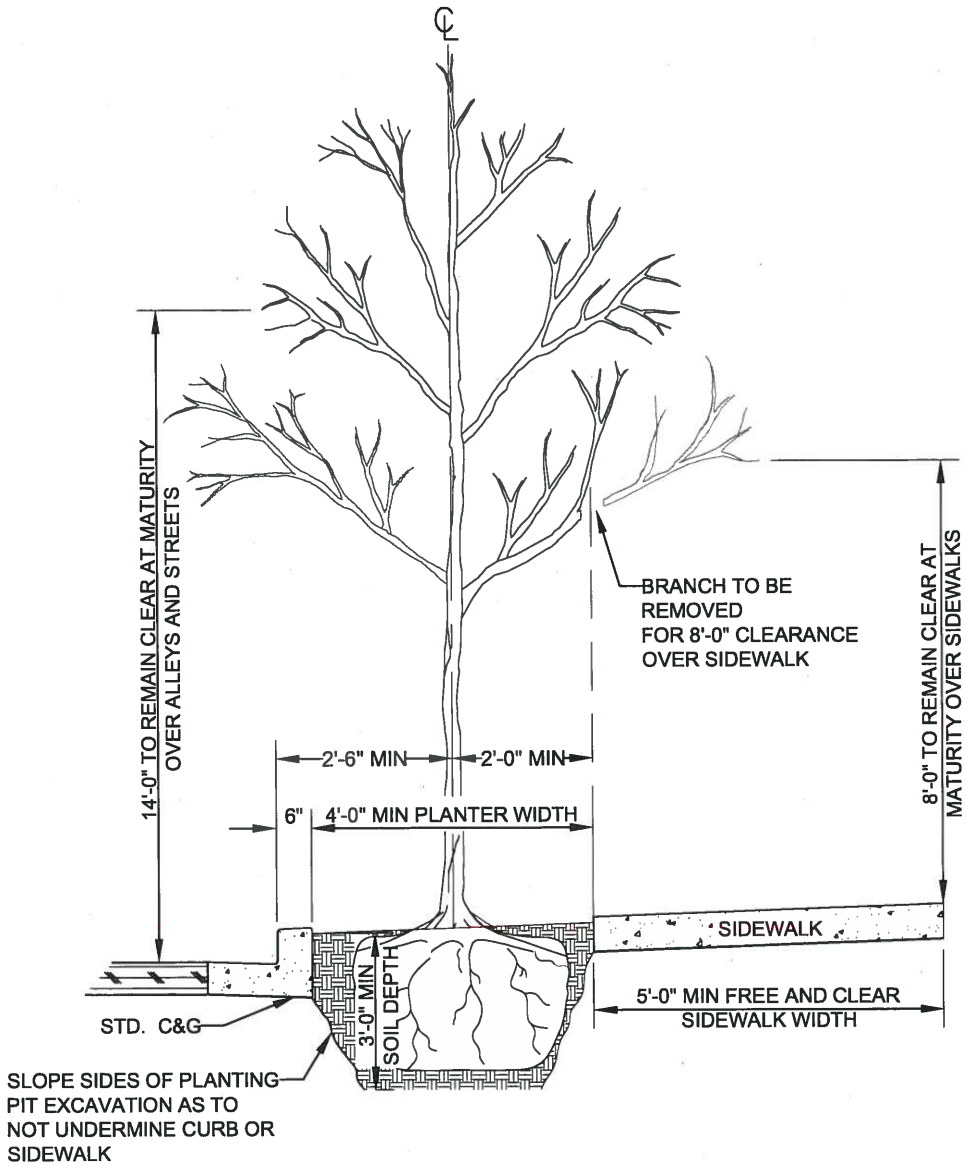

CITY OF TACOMA DEPARTMENT OF PUBLIC WORKS	APPROVED FOR PUBLICATION CITY ENGINEER — DATE 7/6/15	STREET TREE CLEARANCE STANDARD PLAN NO. LS-02

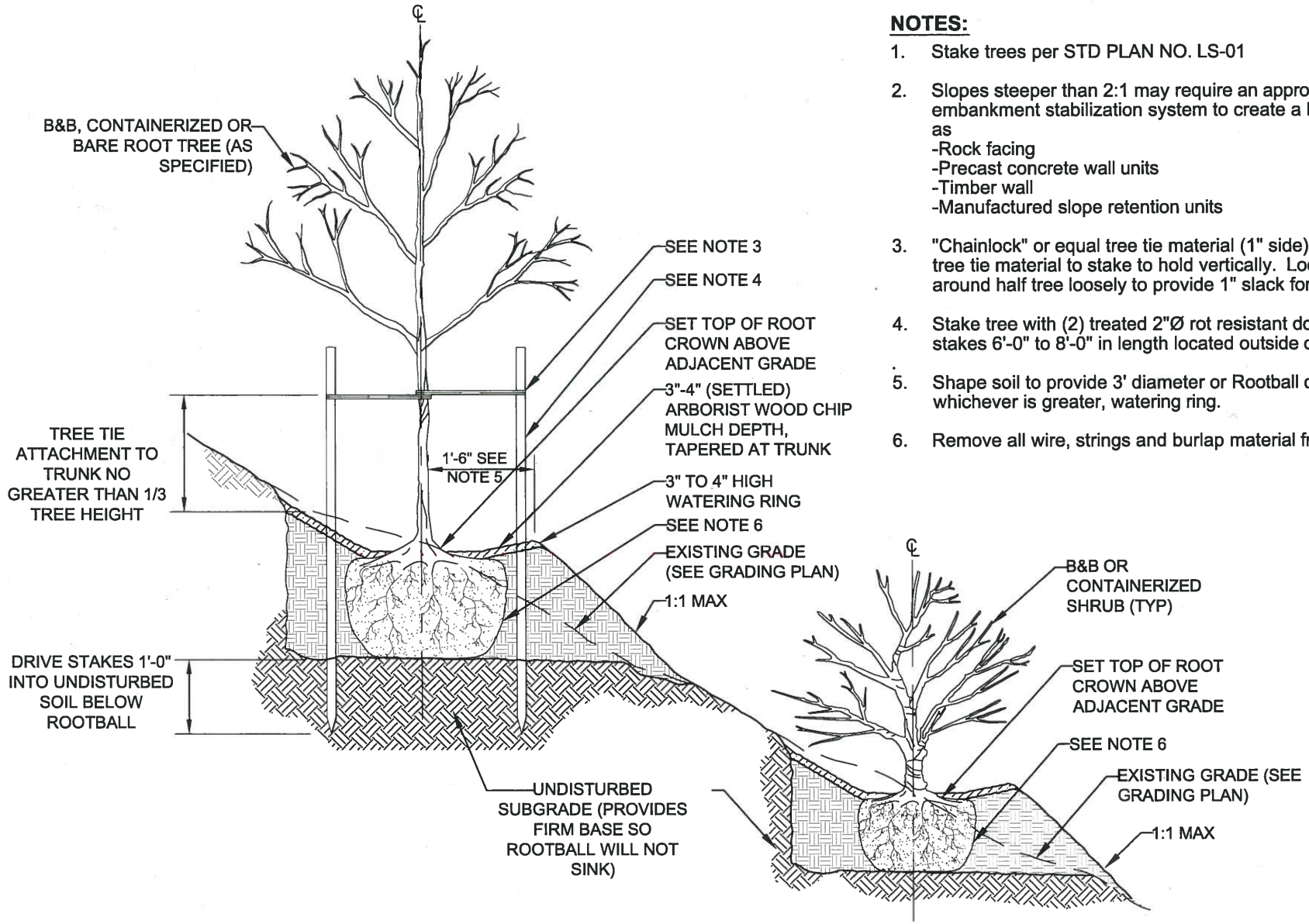

NOTES:

1. Stake trees per STD PLAN NO. LS-01
2. Slopes steeper than 2:1 may require an approves embankment stabilization system to create a level tree pit such as
   -Rock facing
   -Precast concrete wall units
   -Timber wall
   -Manufactured slope retention units
3. "Chainlock" or equal tree tie material (1" side) nail or staple tree tie material to stake to hold vertically. Loop each tie around half tree loosely to provide 1" slack for trunk growth.
4. Stake tree with (2) treated 2"Ø rot resistant doweled wood tree stakes 6'-0" to 8'-0" in length located outside of root mass
5. Shape soil to provide 3' diameter or Rootball diameter, whichever is greater, watering ring.
6. Remove all wire, strings and burlap material from Rootball.

CITY OF TACOMA **DEPARTMENT OF PUBLIC WORKS**	**APPROVED FOR PUBLICATION** CITY ENGINEER — DATE 9/2/16	**TREE & SHRUBS PLANTING ON SLOPES** **STANDARD PLAN NO. LS-04**

NOTES:

(A) When used on high side of roadways, the cross slope of the gutter shall match the cross slope of the adjacent pavement. The height of the curb shall be 6", unless otherwise shown on plans.

(B) Flush with gutter pan at curb ramp entrance or ¾" vertical lip at driveway entrance.

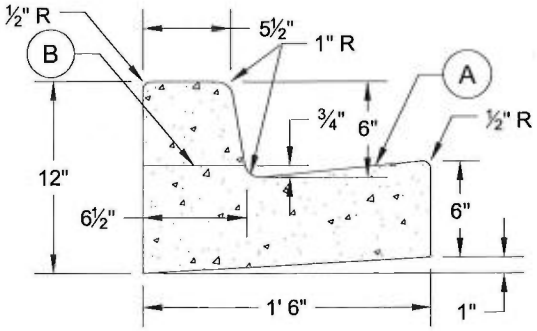

CEMENT CONCRETE TRAFFIC CURB & GUTTER

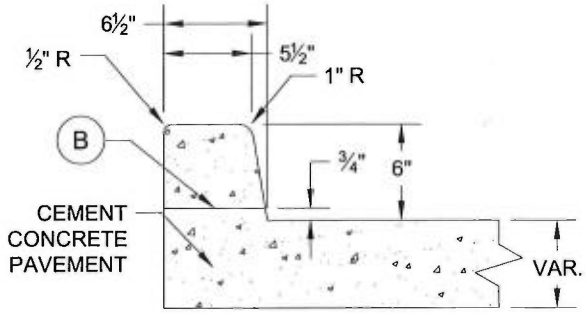

INTEGRAL CEMENT CONCRETE TRAFFIC CURB

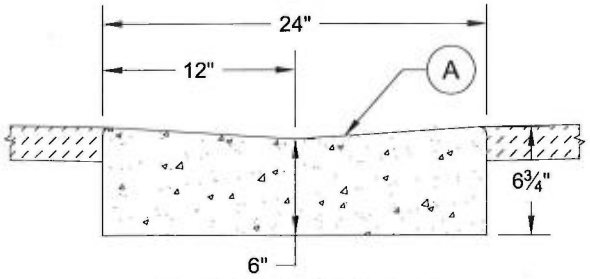

CEMENT CONCRETE VALLEY GUTTER

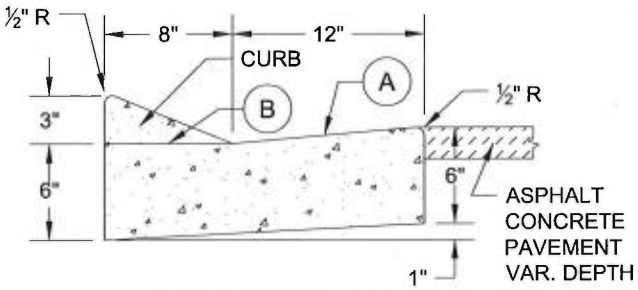

TYPE "C" MOUNTABLE CEMENT CONCRETE CURB & GUTTER

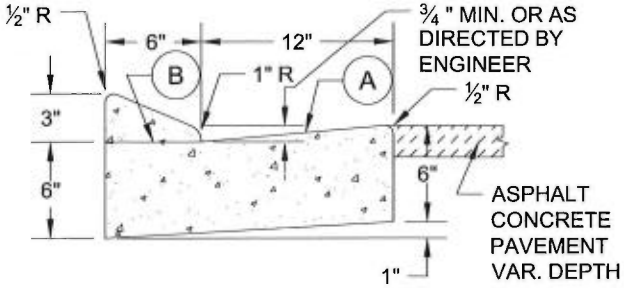

TYPE "D" MOUNTABLE CEMENT CONCRETE CURB & GUTTER

NOTES:

1. For trench crossings, curb and gutter shall be removed to a minimum 2' cut back over undisturbed soil.
2. In all projects, any remaining sections of curb and gutter less than 5' in length between the project area and the nearest control joint shall also be removed and replaced.
3. All joints shall be saw cut full depth prior to restoration and ⅜" expansion joint installed.
4. Concrete finish shall match existing.
5. Cutting wheel run-out beyond the limits of the opening shall be filled in accordance with WSDOT Standard Specification 5-05.3(8)B for cement concrete surfaces and 5-04.3(5)C for asphalt concrete surfaces.
6. Foundations shall be fully compacted prior to form placement.
7. Unsuitable foundation shall be replaced with ⅝" crushed surfacing top course.

REVIEWED BY			APPROVED FOR PUBLICATION	CITY OF TACOMA
DCS	GMS	KURTIS DEAN KINGSOLVER STATE OF WASHINGTON 38229 REGISTERED PROFESSIONAL ENGINEER	8/16/16	CEMENT CONCRETE CURB AND GUTTER
PUBLIC WORKS	ENVIRONMENTAL SERVICES		CITY ENGINEER — DATE	STANDARD PLAN NO. SU-03
NA	NA			
TACOMA POWER	TACOMA WATER			

NOTE:

(B) Flush with gutter pan at curb ramp entrance or ¾" vertical lip at driveway entrance.

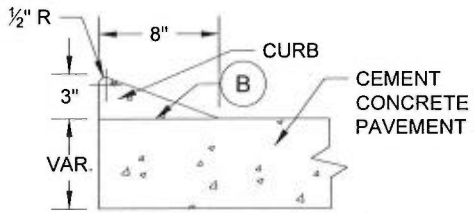

TYPE "C" MOUNTABLE INTEGRAL CEMENT CONCRETE CURB

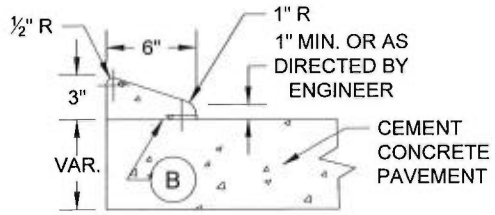

TYPE "D" MOUNTABLE INTEGRAL CEMENT CONCRETE CURB

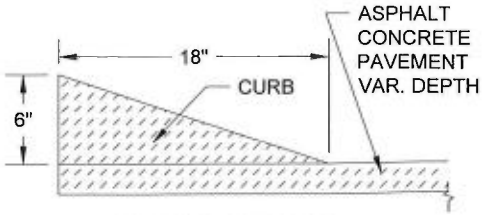

HMA WEDGE CURB DOWNHILL SIDE OF FULL STREET WARP

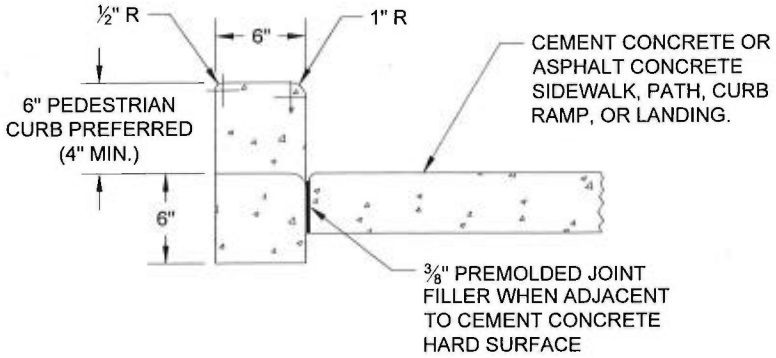

CEMENT CONCRETE PEDESTRIAN CURB

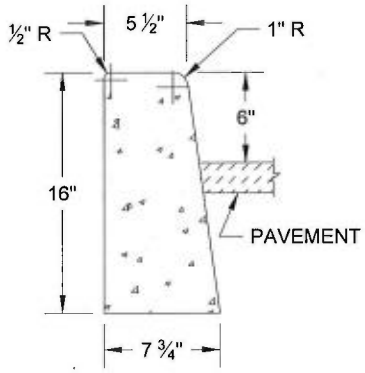

CEMENT CONCRETE TRAFFIC CURB

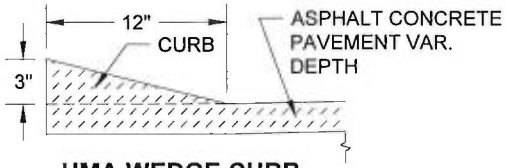

HMA WEDGE CURB STANDARD

NOTES:

1. For trench crossings, curb and gutter shall be removed to a minimum 2' cut back over undisturbed soil.
2. In all projects, any remaining sections of curb and gutter less than 5' in length between the project area and the nearest control joint shall also be removed and replaced.
3. All joints shall be saw cut full depth prior to restoration and ⅜" expansion joint installed.
4. Concrete finish shall match existing.
5. Cutting wheel run-out beyond the limits of the opening shall be filled in accordance with WSDOT Standard Specification 5-05.3(8)B for cement concrete surfaces and 5-04.3(5)C for asphalt concrete surfaces.
6. Foundations shall be fully compacted prior to form placement.
7. Unsuitable foundation shall be replaced with ⅝" crushed surfacing top course.

REVIEWED BY			APPROVED FOR PUBLICATION	CITY OF TACOMA CEMENT CONCRETE CURB AND GUTTER AND ASPHALT WEDGE CURB
DCS	GMS		8/16/16	
PUBLIC WORKS	ENVIRONMENTAL SERVICES		CITY ENGINEER / DATE	STANDARD PLAN NO. SU-03A
NA	NA			
TACOMA POWER	TACOMA WATER			

NOTES:

1. Sidewalks shall be designed and constructed in accordance with 2010 ADA Standards, 28 CFR, Part 35 and as supplemented by the Public Right of Way Accessibility Guidelines (PROWAG). City of Tacoma prefers sidewalk cross slopes to be designed to a maximum of 1.5% and a minimum of 1.0%
2. When placing walk adjacent to existing curb and gutter, curb and gutter will be repaired as necessary before placing concrete forms for walk.
3. Staking is required where no curb is present.
4. Thickened edge shall be constructed using cement concrete on all radii. All other locations shall be backfilled and compacted.
5. Combination walk shall be 7' min. on all commercial sites and arterial streets. Combination walk shall be a minimum of 5' on non arterial streets. Dimensions are from back of curb to back of walk. See contract plans for width and placement of sidewalk.
6. All expansion joints shall be full depth with ⅜" premolded joint filler.
7. All joints shall be cleaned and edged. External edges shall be ½" radius. Internal joints shall be ¼" radius.
8. All soft and yielding foundation material shall be removed and replaced with crushed surfacing top course (CSTC) per Section 9-03.9(3) of the WSDOT Standard Specifications.
9. All sidewalk shall be replaced to the nearest expansion or contraction joint. All joints shall be saw cut full depth prior to restoration and ⅜" expansion joint installed. Cutting wheel run-out beyond the limits of the opening shall be filled in accordance with WSDOT Standard Specification 5-05.3(8)B for cement concrete surfaces and 5-04.3(5)C for asphalt concrete surfaces.
10. For sidewalks within the North Slope Historical District area use Standard Plan HD-NS03. See Standard Plan HD-NS01 for North Slope Historic District site map.

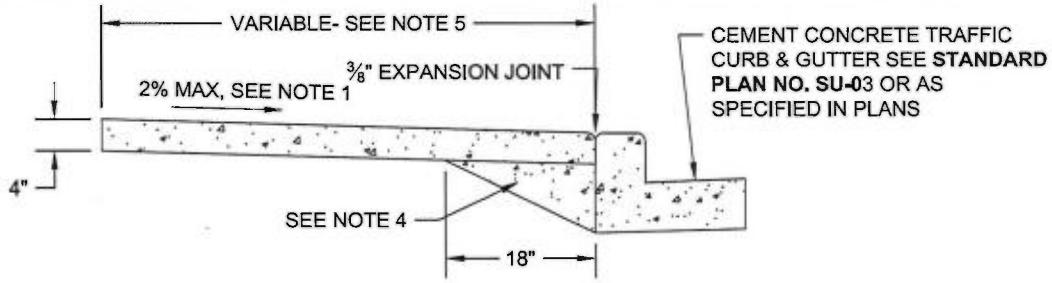

SECTION DETAIL A-A

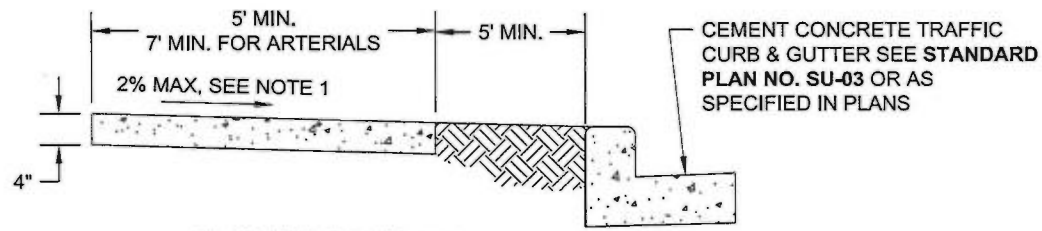

SECTION DETAIL B-B

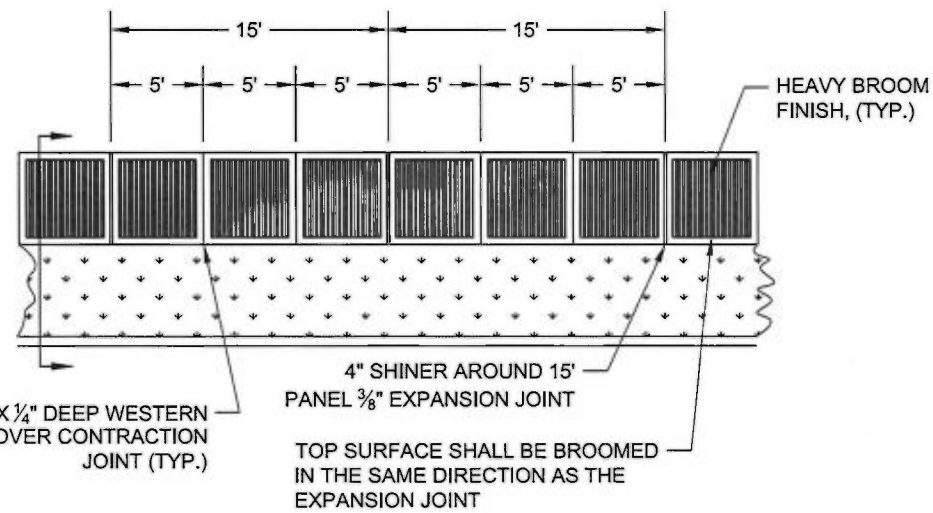

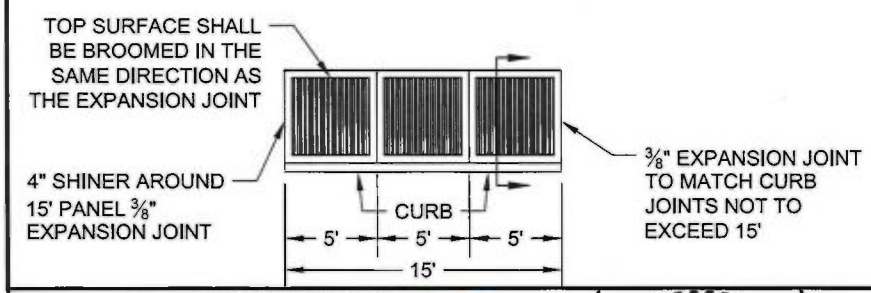

REVIEWED BY		APPROVED FOR PUBLICATION	CITY OF TACOMA
DCS PUBLIC WORKS	GMS ENVIRONMENTAL SERVICES	4/25/17 CITY ENGINEER — DATE	CEMENT CONCRETE SIDEWALK
N/A TACOMA POWER	N/A TACOMA WATER		STANDARD PLAN NO. SU-04

NOTES

1. Use the following as a guide of when each Entrance or Access Type should be used:
   - 1.a. Cement Concrete Driveway Entrances Type 1 (Entrances) or Accesses Type 1 (Accesses) shall be used at driveways where the planting strip width is 3' or greater. See Standard Plan SU-07A.
   - 1.b. Cement Concrete Driveway Entrances Type 2 (Entrances) or Access Type 2 (Accesses) shall be used at driveways and alleys where the planting strip is less than 3' wide. See Standard Plan SU-07B.
   - 1.c. Cement Concrete Alley Entrance Type 3 (Entrances) or Accesses Type 3 (Accesses) shall be used at alleys where the planting strip is 3' wide or greater. See Standard Plan SU-07C.
   - 1.d. New proposed planter widths shall be 5' min, with Type 1 Driveway Entrance or Type 3 Alley Entrance
2. Standard Concrete shall be a minimum compressive strength of 3,000 PSI.
3. Concrete Joints:
   - 3.a. All joints shall be cleaned & edged.
   - 3.b. All expansion or isolation joints shall be full depth.
   - 3.c. External joints to the driveway shall be 1/2" radius. Internal joints to the driveway shall be 1/4" radius.
   - 3.d. All joints shall be saw cut full depth prior to restoration and 3/8" expansion joint installed. Cutting wheel run-out beyond the limits of the opening shall be filled in accordance with WSDOT Standard Specification Section 5-03.
4. Entrances and Accesses wider or narrower than shown on this plan require approval of the Director of Public Works.
5. Entrances and Accesses shall have a brushed finish in a transverse direction to the center line of Entrance or Access.
6. Entrances or Accesses wider than 20' require a center line expansion joint.
7. When trenching through an Entrance or Access:
   - 7.a. If Entrance or Access is 20' or less in width, full replacement is required.
   - 7.b. If Entrance or Access is greater than 20' in width, a minimum 2' wide cut back over undisturbed soil is required and replacement shall extend to the nearest control joint.
8. Transition panels are required when a new driveway entrance or access matches into a sidewalk with a cross slope greater than 2%. Transition panels shall be a minimum of 5' in length.
9. For Entrances or Accesses within the North Slope Historical District area use Standard Plan HD-NS02. See Standard Plan HD-NS01 for map of Historical District area limits.
10. Permeable surfacing may be allowed for Entrances or Accesses. Refer to Standard Plans PD-01 and PD-02 as applicable. Do not compact subgrade for permeable surfacing and refer to APWA GSP 2-06.3(3) Subgrade for Permeable Pavements. A soils report is required and modeling may be necessary per SWMM BMP L633.
11. Geomembrane barrier required between standard and permeable sections. Refer to City of Tacoma Standard Plan GSI-18.
12. Refer to Tacoma Municipal Code 10.14, driveways for additional information.
13. A 2" Ø PVC Sch. 80 Pipe with capped ends shall be installed as shown, per TMC 10.14.070. Pipe shall be buried 24 inches below finished grade and have a pull string and location wire per WSDOT 9-29
14. A detectable warning surface shall be placed at any Entrance or Access if, and only if, any of the following are true/expected:
    - The Average Daily Traffic of the alley/driveway is greater than 700 or is reasonably expected to exceed 700 vehicles per typical day upon future development, such as alleys in regional growth centers and mixed-use centers where zoning supports significant growth.
    - It is located in a high pedestrian use area such as, a designated pedestrian street in a mixed-use center, or a school walking route.
    - A safety concern is documented by the City Traffic Engineer.
15. The detectable warning pattern, if needed, shall be placed the full width of the sidewalk in accordance with City of Tacoma Standard Plan SU-05A.
16. When an existing entrance or access does not meet current ADA standards as defined by the City of Tacoma's Design Manual, the entire entrance or access shall be replaced to current ADA standards.

REVIEWED BY		APPROVED FOR PUBLICATION	CITY OF TACOMA NOTES FOR CEMENT CONCRETE DRIVEWAY AND ALLEY ENTRANCE OR ACCESS
DS RVDR PUBLIC WORKS	DS EW ENVIRONMENTAL SERVICES	DocuSigned by: 10/02/2022	
DS TACOMA POWER	DS TS TACOMA WATER	CITY ENGINEER DATE	STANDARD PLAN NO. SU-07

JOSHUA JAMES DIEKMANN STATE OF WASHINGTON 41361 REGISTERED PROFESSIONAL ENGINEER

FOR DRIVEWAY ENTRANCE AND ACCESS NOTES, SEE STANDARD PLAN SU-07

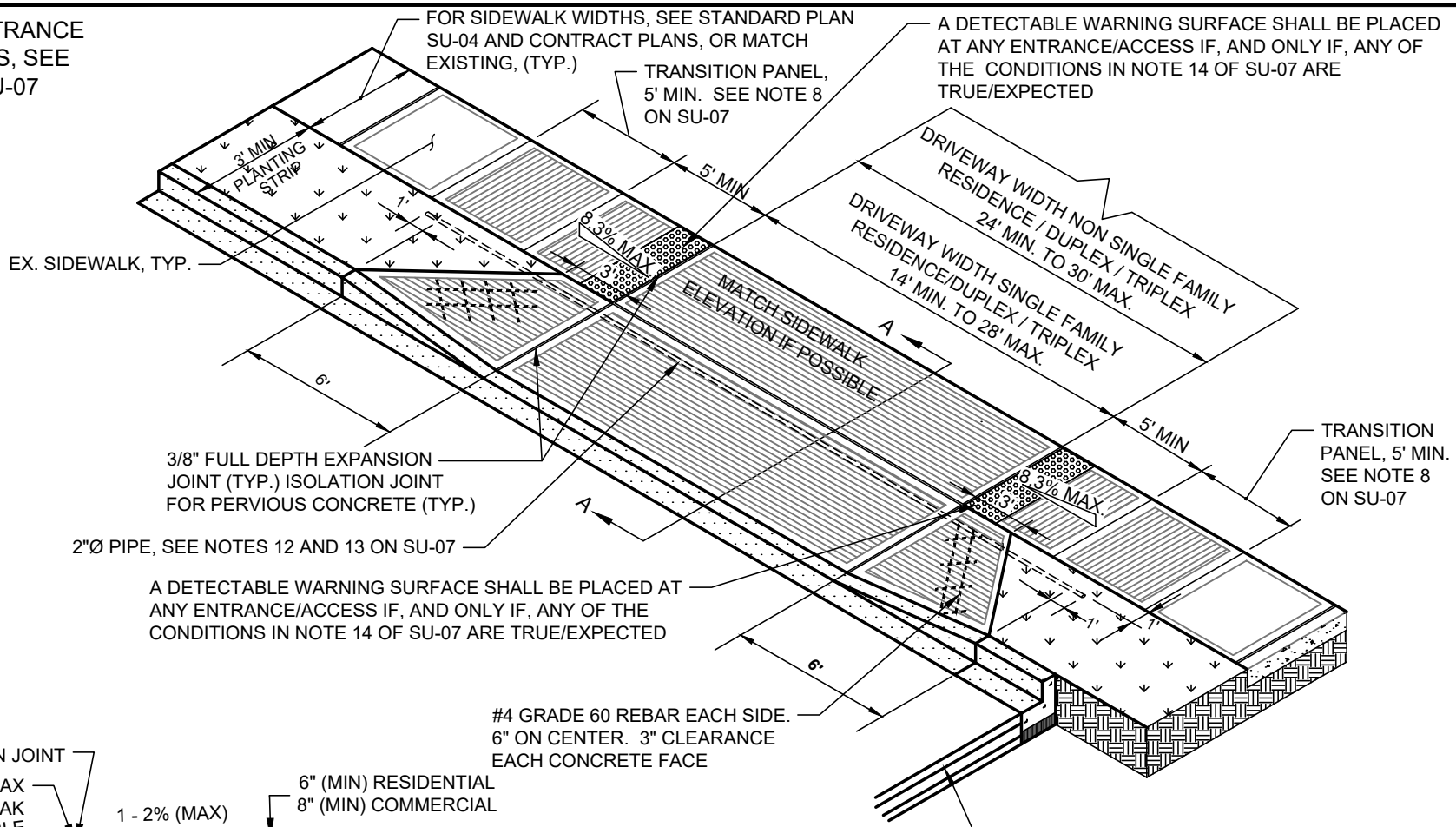

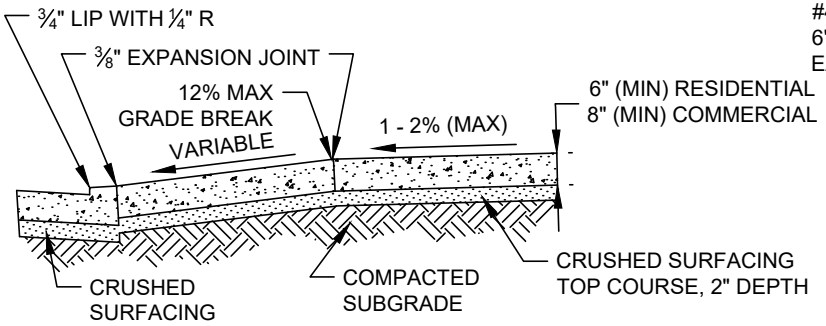

NOTE: DESIGNED SECTION REQUIRED FOR PERMEABLE SURFACING. SEE NOTES 10 AND 11 ON SU-07.

STANDARD CONCRETE SECTION DETAIL A-A

NTS

REVIEWED BY		APPROVED FOR PUBLICATION	CITY OF TACOMA CEMENT CONCRETE DRIVEWAY ENTRANCE AND ACCESS TYPE 1
DS RVDR PUBLIC WORKS	DS EW ENVIRONMENTAL SERVICES	DocuSigned by: 10/02/2022 CITY ENGINEER DATE	STANDARD PLAN NO. SU-07A
DS TACOMA POWER	DS TS TACOMA WATER		

JOSHUA JAMES DIEKMANN STATE OF WASHINGTON 41361 REGISTERED PROFESSIONAL ENGINEER

FOR DRIVEWAY ENTRANCE AND ACCESS NOTES, SEE STANDARD PLAN SU-07

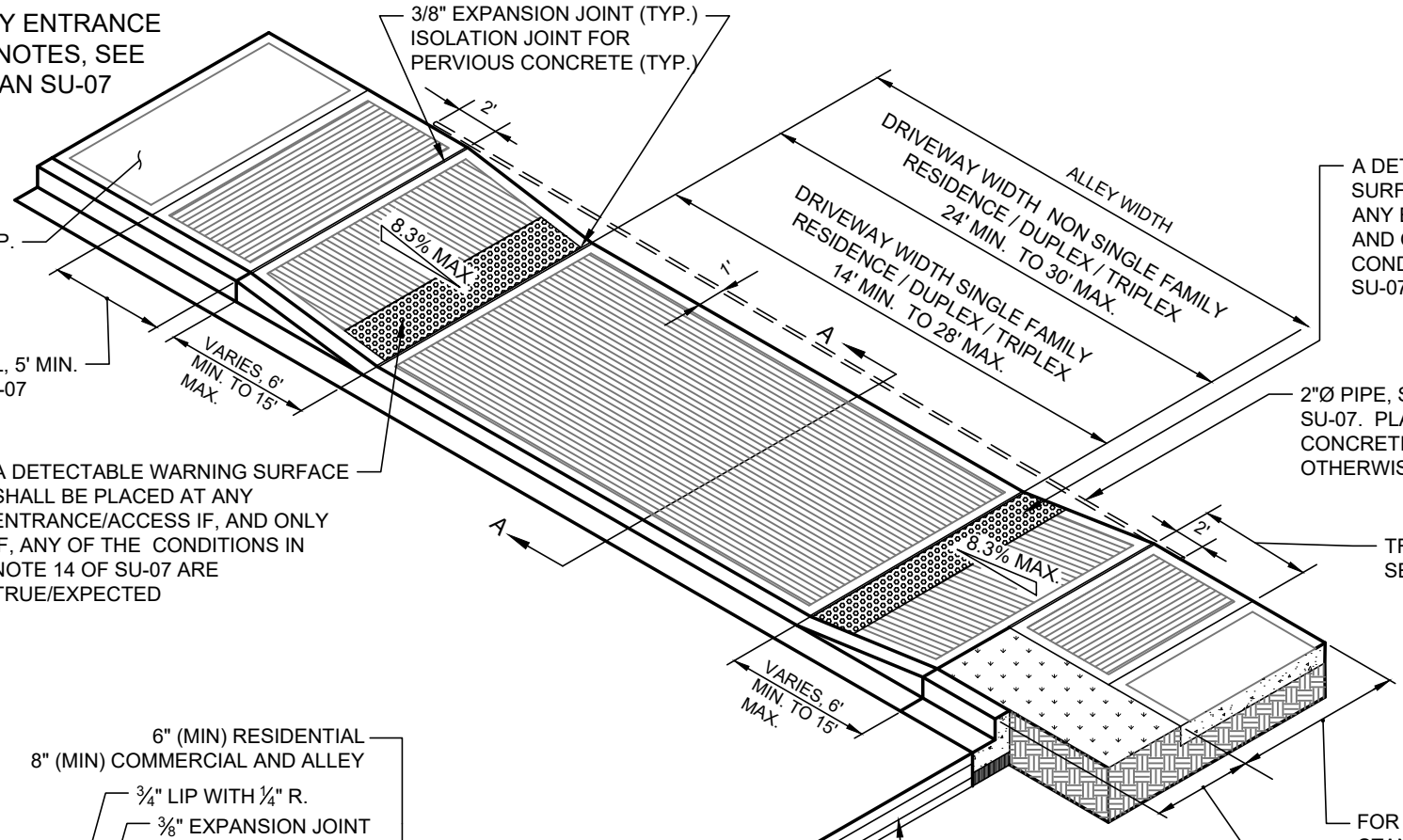

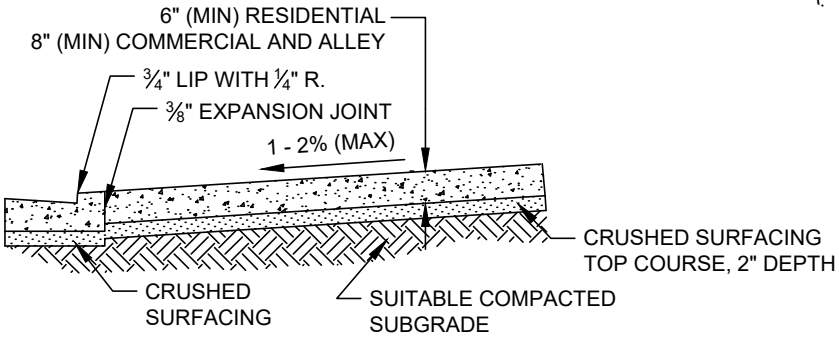

NOTE: DESIGNED SECTION REQUIRED FOR PERMEABLE SURFACING. SEE NOTES 10 AND 11 ON SU-07.

STANDARD CONCRETE SECTION DETAIL A-A

NTS

REVIEWED BY			APPROVED FOR PUBLICATION	CITY OF TACOMA CEMENT CONCRETE ALLEY ENTRANCE AND ACCESS TYPE 2
DS PUBLIC WORKS	DS ENVIRONMENTAL SERVICES	JOSHUA JAMES DIEKMANN STATE OF WASHINGTON 41361 REGISTERED PROFESSIONAL ENGINEER	DocuSigned by: 05/08/2023	
DS TACOMA POWER	DS TACOMA WATER		CITY ENGINEER 55A2DE5E2D2E4F... DATE	STANDARD PLAN NO. SU-07B

FOR ALLEY ENTRANCE AND ACCESS NOTES, SEE STANDARD PLAN SU-07

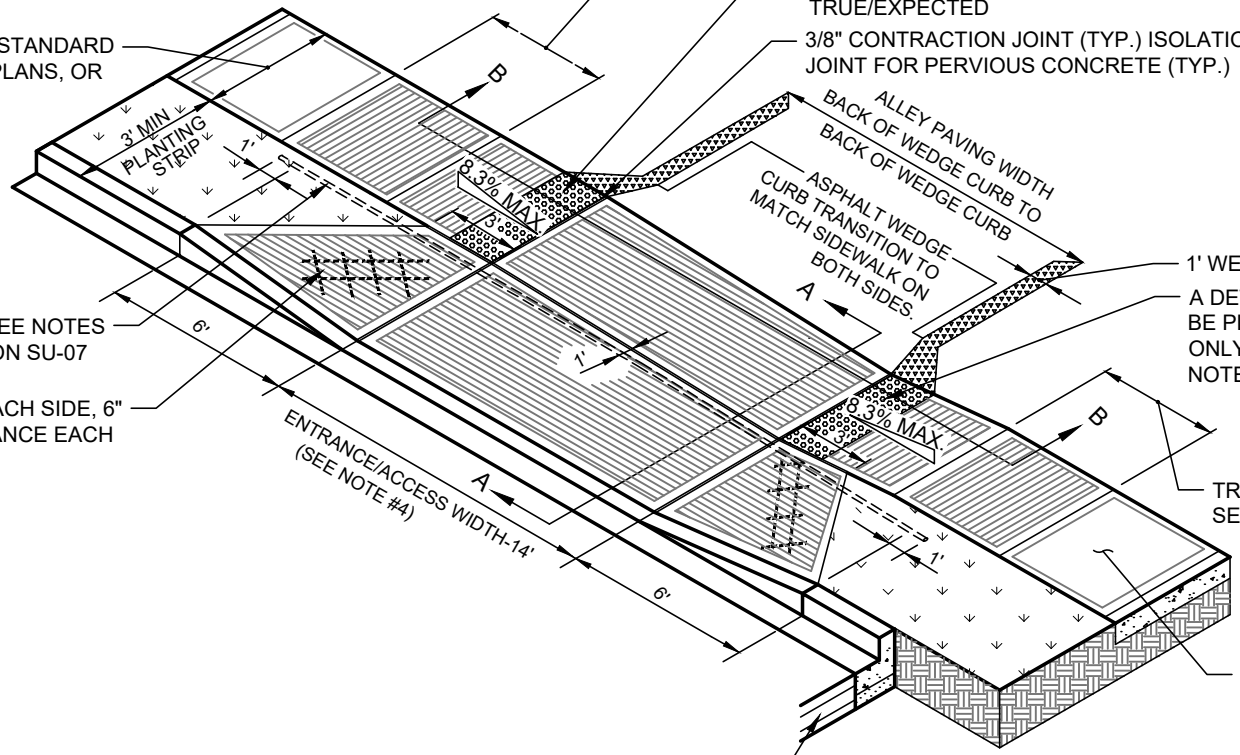

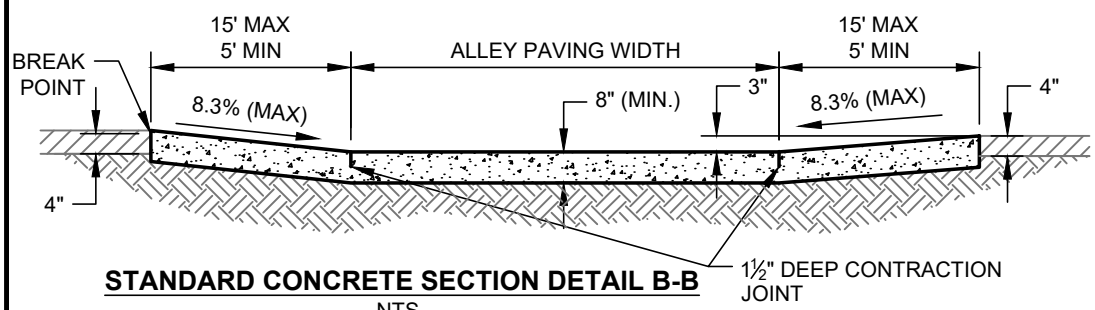

STANDARD CONCRETE SECTION DETAIL B-B

NTS

NOTE: DESIGNED SECTION REQUIRED FOR PERMEABLE SURFACING. SEE NOTES 10 AND 11 ON SU-07.

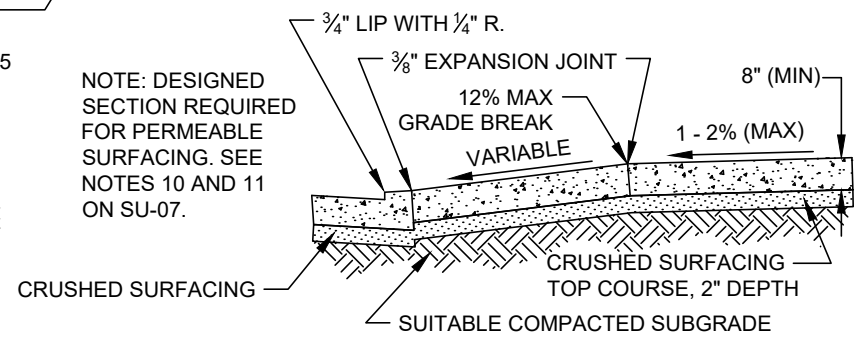

STANDARD CONCRETE SECTION DETAIL A-A

NTS

REVIEWED BY		APPROVED FOR PUBLICATION	CITY OF TACOMA CEMENT CONCRETE ALLEY ENTRANCE AND ACCESS TYPE 3
DS PUBLIC WORKS	DS ENVIRONMENTAL SERVICES	DocuSigned by: 66A2DE3ED2E46F... CITY ENGINEER	05/08/2023 DATE
DS TACOMA POWER	DS TACOMA WATER		STANDARD PLAN NO. SU-07C

JOSHUA JAMES DIEKMANN STATE OF WASHINGTON 41361 REGISTERED PROFESSIONAL ENGINEER

NOTES

1. **All pavement restoration work shall also meet the requirements of the City of Tacoma's Right of Way Restoration Policy. See Standard Plan SU-15B for any streets exempt from this policy.**
2. Temporary Surface Restoration:
   Arterials, industrial areas and/or roads with bus traffic: Temporary patches shall be compacted and leveled to a minimum of 3-inches of hot-mix asphalt (HMA).

   Residentials and alleys: Temporary patches shall be compacted and leveled to a minimum of 2-inches of either HMA or cold-mix asphalt. Temporary patches between October 1st and March 31st shall be made with HMA unless otherwise approved.
3. All permanent final patches shall be rectangular in shape and constructed parallel and perpendicular to the road centerline.
4. Where existing pavement defects are in close proximity to the new cut, the inspector may require additional pavement removal to eliminate the pavement defect.
5. The final cut edge of paved surfaces shall be smooth and straight, consistent with grinding or saw cutting devices. No jagged, broken or undermined edges are allowed. Cutting wheel run-out beyond the limits of the opening shall be filled in accordance with WSDOT Standard Specification 5-05.3(8)B for cement concrete surfaces and 5-04.3(5)C for asphalt concrete surfaces.
6. Final compaction of HMA shall be 91% of maximum density.

   Isolated patches: Minimum 1 test per patch up to 150 square feet, and 1 test required every additional 300 square feet, thereafter.

   Trench patches: 1 test every 150 linear feet of trench with a minimum of 2 tests per trench.

   Testing shall be performed by a certified independent testing laboratory or certified tester, as approved by the City's Construction Division. Tests shall be completed and reports identifying the project number submitted to the City Construction Division within 48 hours of test.
7. All joints between the new and original asphalt pavement shall be sealed with hot asphalt or asphalt emulsion and covered with dry paving sand before the asphalt solidifies. Existing surfaces shall be prepared in accordance with WSDOT Standard Specification 5-04.3(5)A prior to placing any new pavement surfaces.
8. Longitudinal construction joints shall only be located at the center or edge of affected lanes.

   Streets and courts 20 feet or less in width and all alleys are considered one-lane streets. Non-arterial streets and courts greater than 20 feet in width with no traffic channelization are considered two-lane streets with one-lane either side of the centerline of the street.

   Non-arterial streets greater than 32 feet in width with no traffic channelization may be considered three lane streets upon prior approval from the City Engineer.
9. Transverse construction joints terminate at the edge of the 2' cut back.
10. HMA pavement shall not be placed over CDF until approved by the City.

TABLE 1

PAVEMENT REPLACEMENT DEPTH IN CUT BACK ZONE

	MIN.	MAX.
ARTERIALS, INDUSTRIAL AREAS & ROADS WITH BUS TRAFFIC	MATCH EXISTING +1", OR 4", WHICHEVER IS GREATER	6"
RESIDENTIALS AND ALLEYS	MATCH EXISTING +1", OR 3", WHICHEVER IS GREATER	4"

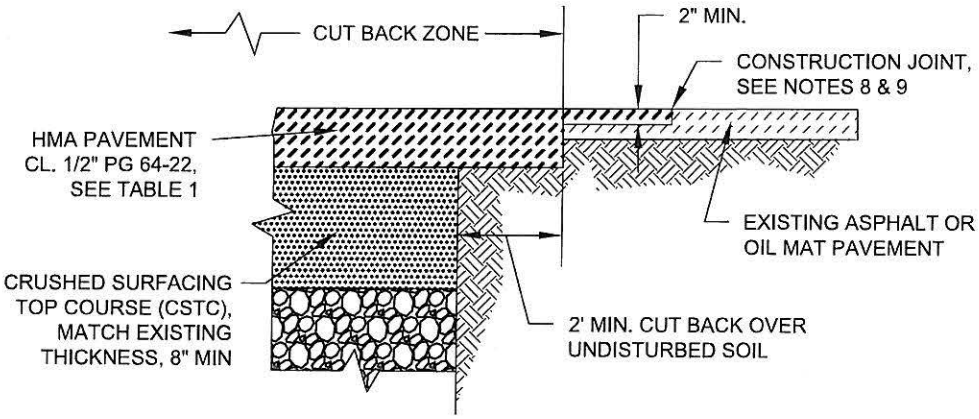

CITY OF TACOMA DEPARTMENT OF PUBLIC WORKS	APPROVED FOR PUBLICATION CITY ENGINEER — DATE: 12 Jun 2009	TYPICAL PAVEMENT RESTORATION FOR ASPHALT CONCRETE/OIL MAT PAVEMENT STANDARD PLAN NO. SU-15A

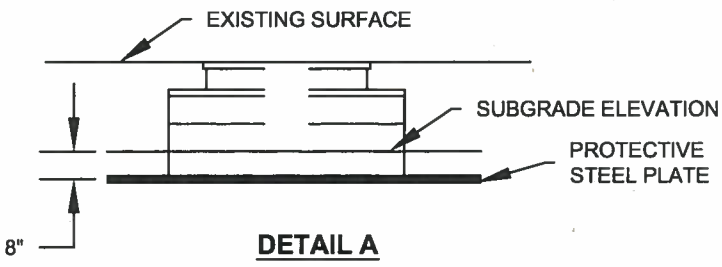

DETAIL A

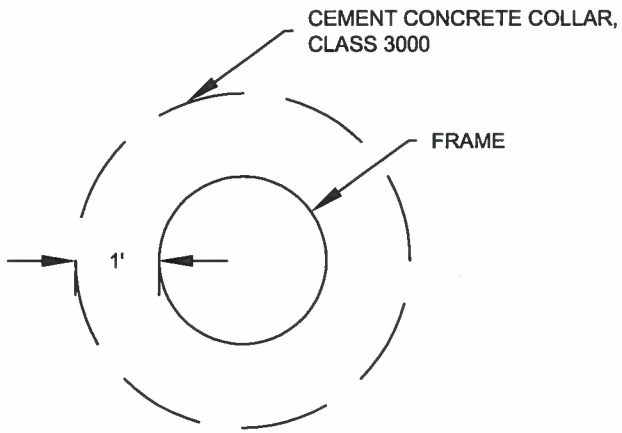

DETAIL B

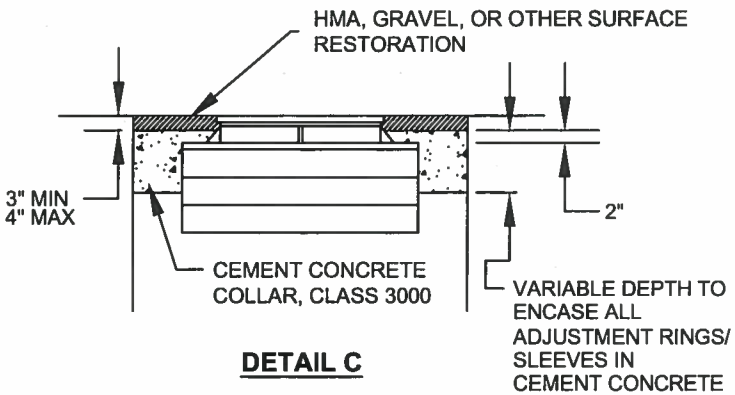

DETAIL C

PROGRESSION OF WORK

PRIOR TO EXCAVATING OR RESURFACING:

Contractor shall:
Remove frame and risers to a depth 8-inches below subgrade.
Install steel protective plate in accordance with Detail A.
Reference the location of the utility structure.

CONSTRUCTION OF SURFACING:

Gravel surfacing:
Install base materials and gravel over protective steel plate.

Asphalt surfacing:
Install base materials and asphalt over protective steel plate.

Concrete surfacing:
Adjust frame and grate to final grade prior to placing concrete surfacing.

UPON COMPLETION OF SURFACING:

The asphalt concrete pavement or gravel surfacing shall be removed in a neat circle in accordance with Detail B.

The location of the asphalt or gravel removal shall be based upon the reference location established by the Contractor.

Crushed surfacing and base materials shall be removed and disposed of to allow the removal of the steel protective plate.

The structure shall be adjusted to finish grade utilizing the same methods of construction as specified for new construction in Section 7-05.

For hot mix asphalt, the area shall then be backfilled with Class 3000 cement concrete to an elevation of 3 to 4 inches below the finished pavement surface. 24-hours after placing the concrete, HMA pavement CL. 3/8" PG 64-22 shall be placed in accordance with Standard Plan No. SU-15.

For non-paved surfaces, the area shall be backfilled with Class 3000 cement concrete to an elevation of 3 to 4 inches below the top of the casting and then backfilled with crushed surfacing top course and compacted.

NOTE:

All general provisions, construction and warranty requirements of the Right of Way Restoration Policy will be followed.

CITY OF TACOMA **DEPARTMENT OF PUBLIC WORKS**	**APPROVED FOR PUBLICATION** CITY ENGINEER — DATE 4/25/14	**UTILITY ADJUSTMENT** **STANDARD PLAN NO. SU-25**

ABBREVIATIONS

F.C.....	FACE OF CURB
C.G.....	CURB GRADE
F.L.....	FLOW LINE
F.WALL...	FACE OF WALL
SH.GR....	SHOULDER GRADE
C.B.....	CATCH BASIN
M.H.....	MAN HOLE
L.H.....	LAMP HOLE
S.G.....	SUBGRADE
B.G.....	BALLAST GRADE
CR.R.GR.	CRUSHED ROCK GRADE
P.C.....	POINT OF CURVATURE
P.T.....	POINT OF TANGENCY
V.C.....	VERTICAL CURVE
E.P.....	EDGE OF PAVING

* DESIGNATES DISTANCE FROM GUARD STAKE TO GRADE OR LINE HUB. (OPTIONAL)

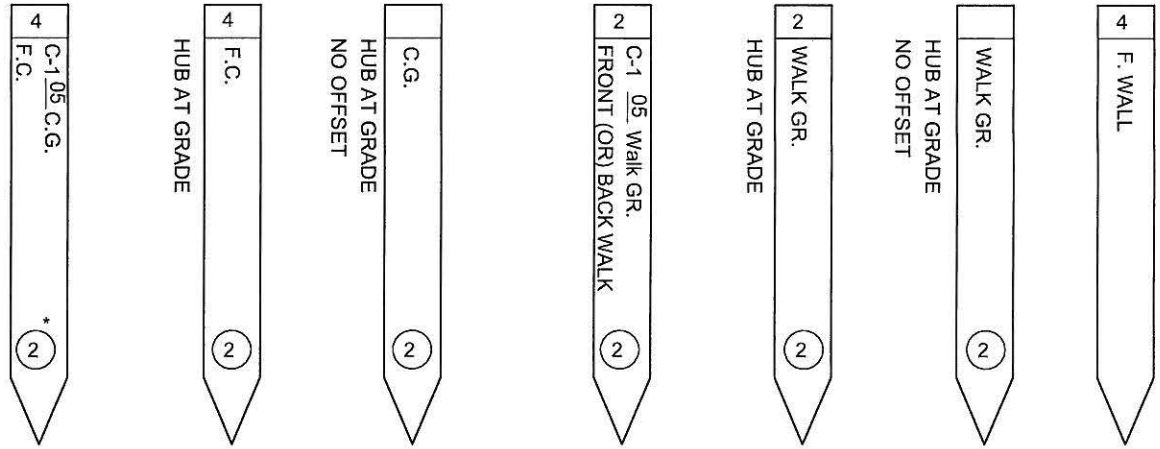

STAKES SHALL HAVE STATIONS ON BACK SIDE

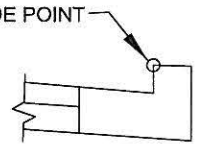

CURBS

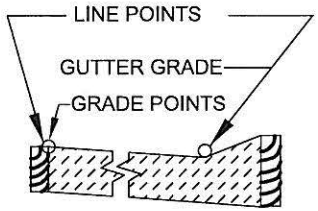

ALLEY SLABS

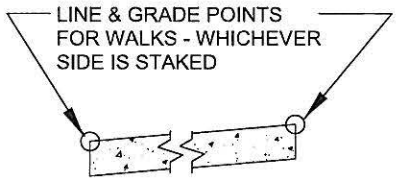

WALKS

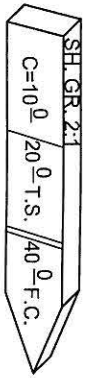

SLOPE STAKES

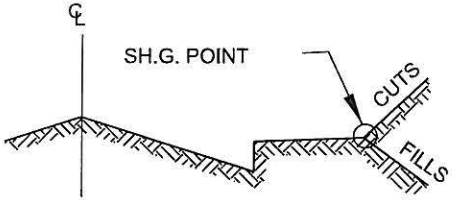

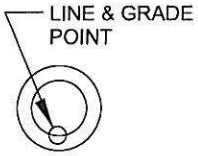

SEWERS

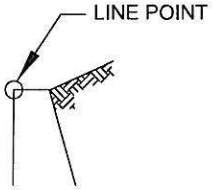

WALLS

SIDE OR BACK

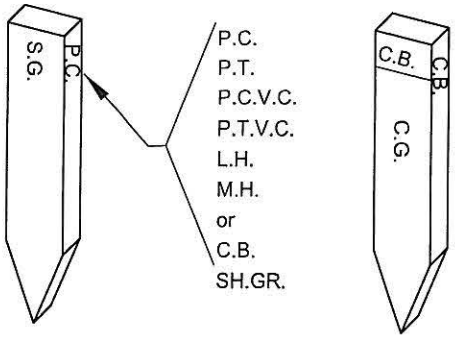

CITY OF TACOMA DEPARTMENT OF PUBLIC WORKS	APPROVED FOR PUBLICATION James Powers 12 Jun 2004 CITY ENGINEER DATE	STANDARD PROCEDURE FOR MARKING CONSTRUCTION STAKES STANDARD PLAN NO. SU-26

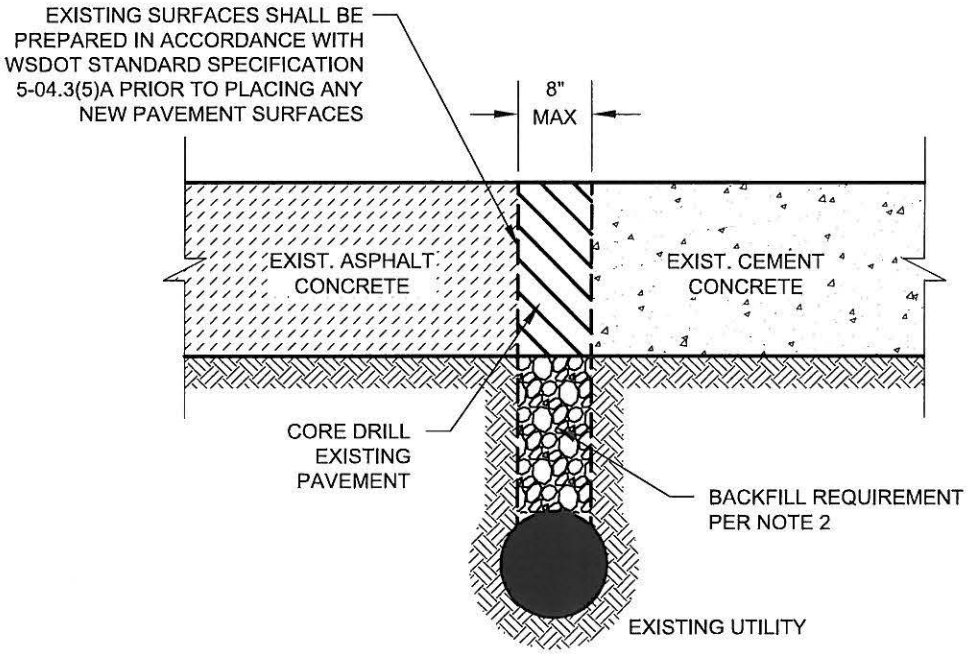

NOTES:

1. The existing pavement shall be cut full depth with an eight inch diameter core drill. The subbase material shall be removed using a vacuum excavator, keeping the excavation as minimal as possible.
2. Backfill the excavation with a six inch cushion of crushed rock over the utility then place the remaining void with CDF or compacted CSTC.
3. For asphalt concrete streets, repair the cored pavement section with HMA Class ½" PG 64-22 and seal the joint.
4. For cement concrete pavement streets, replace the cored section with Class 6000 cement concrete.
5. If excavation is larger than 8" core, restoration shall comply with the Right of Way Restoration Policy.

CITY OF TACOMA DEPARTMENT OF PUBLIC WORKS	APPROVED FOR PUBLICATION CITY ENGINEER — DATE 12 Jun 2009	POTHOLING STANDARD PLAN NO. SU-27

NOTES:

1. Surface mounting of sign posts, especially within traffic islands or medians, is only allowable with special authorization from the city's traffic engineering group, (Exception: Surface mounting of flexible post object markers within islands or medians is permitted).
2. If finished ground line is a hard surface, then compacted native backfill material shall be concrete with the top of foundation being smooth, dense, and uniform to finished ground line.

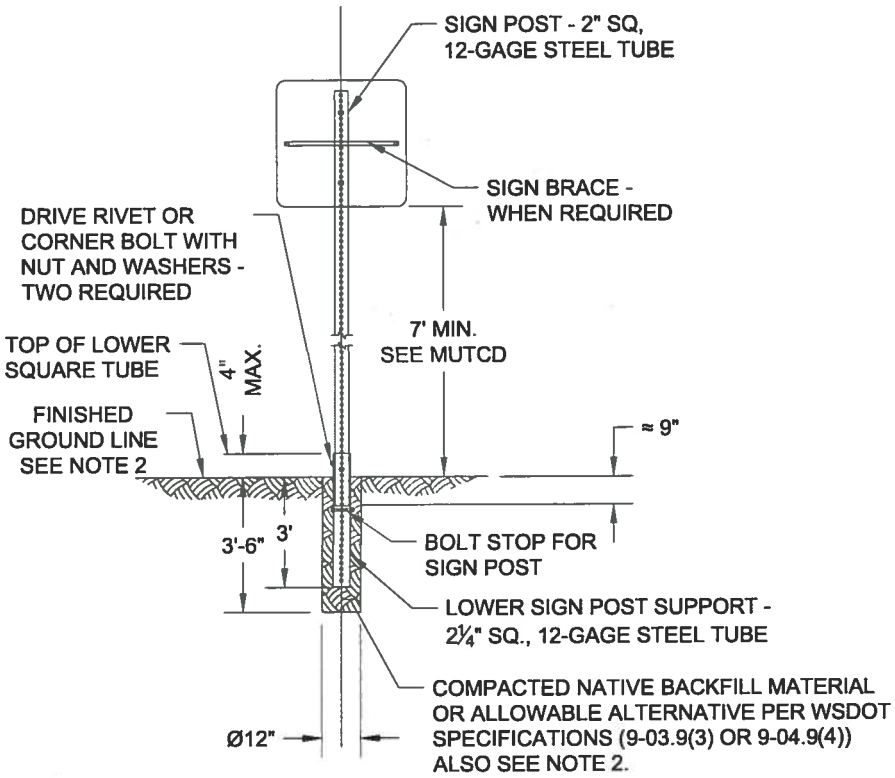

SIGN SUPPORT DETAIL FOR STEEL SIGN POST

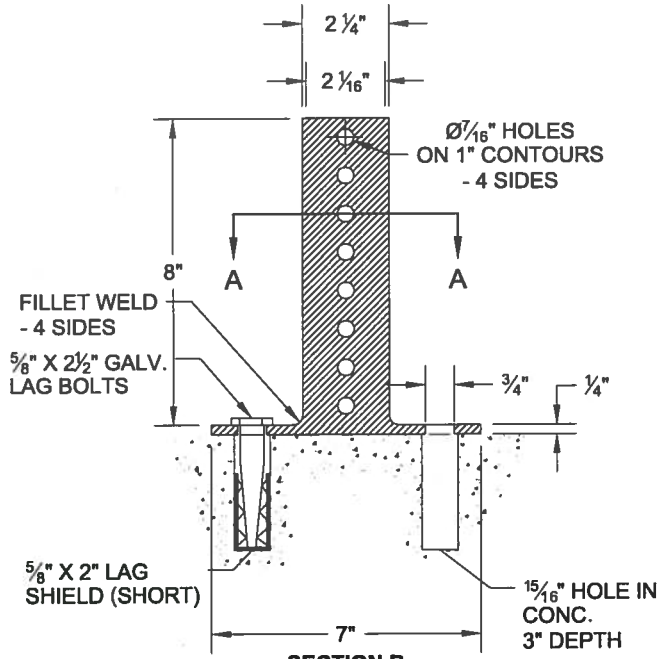

BASE PLATE DETAIL FOR STEEL SIGN POST SURFACE MOUNTING (SEE NOTE 1)

REVIEWED BY		APPROVED FOR PUBLICATION	CITY OF TACOMA
DCS PUBLIC WORKS	GMS ENVIRONMENTAL SERVICES	CITY ENGINEER — DATE 4/4/14	SIGN POST INSTALLATION
NA TACOMA POWER	NA TACOMA WATER		STANDARD PLAN NO. SU-34

KURTIS DEAN KINGSOLVER · STATE OF WASHINGTON · 31229 · REGISTERED PROFESSIONAL ENGINEER

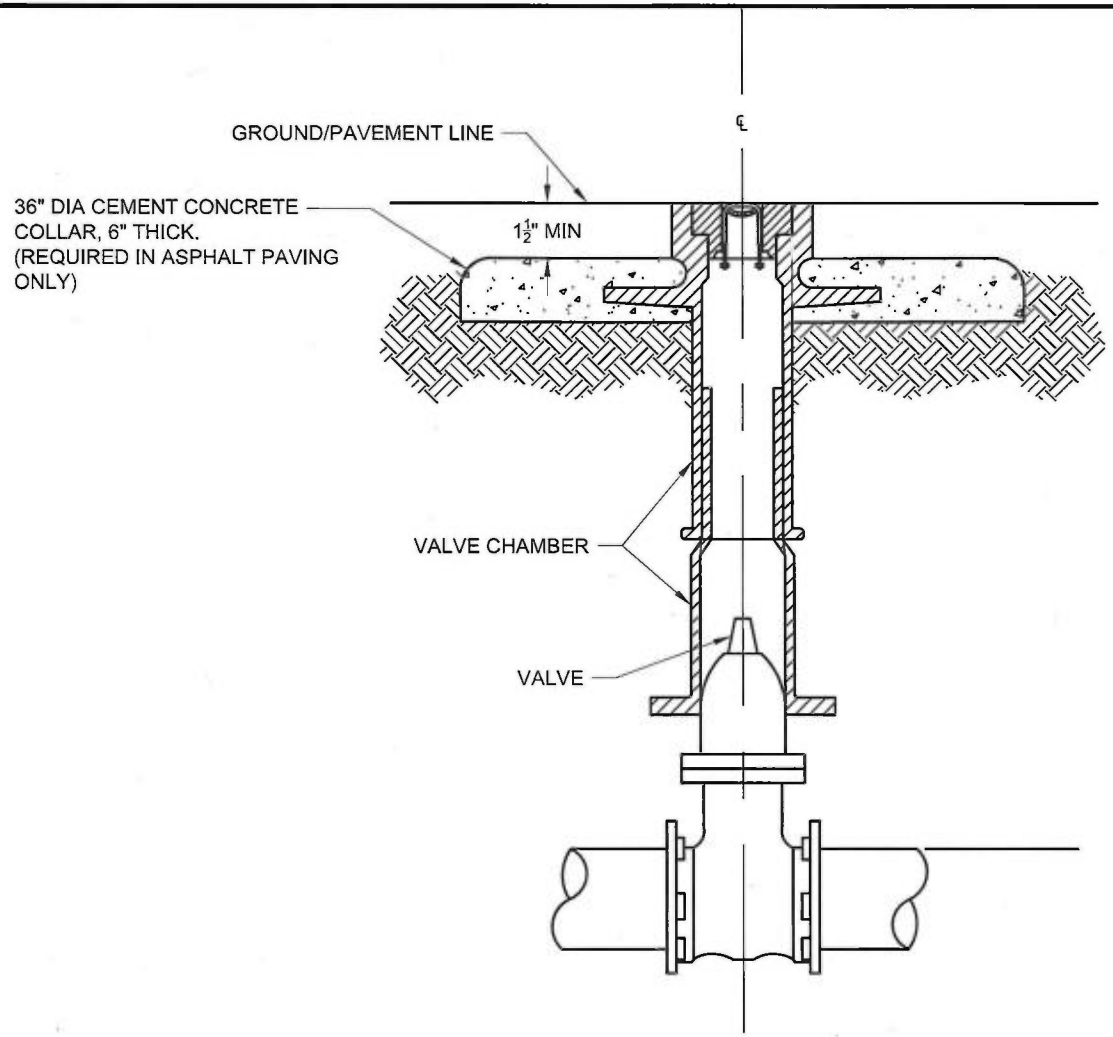

NOTES:

Class 3000 cement concrete shall be placed, 1 ½" min, below the finished pavement surface.

24-hours after placing the cement collar, HMA Class ⅜" PG 64-22 shall be placed in accordance with Standard Plan SU-15.

If the valve chamber being adjusted belongs to Tacoma Water, the Contractor shall contact Tacoma Water, Operations, at 253-502-8742 for final inspection.

REVIEWED BY			APPROVED FOR PUBLICATION	CITY OF TACOMA VALVE CHAMBER COLLAR DETAIL
DCS PUBLIC WORKS	GMS ENVIRONMENTAL SERVICES	KURTIS DEAN KINGSOLVER STATE OF WASHINGTON 31229 REGISTERED PROFESSIONAL ENGINEER	5/31/12 CITY ENGINEER DATE	
N/A TACOMA POWER	G.W. TACOMA WATER			STANDARD PLAN NO. SU-37

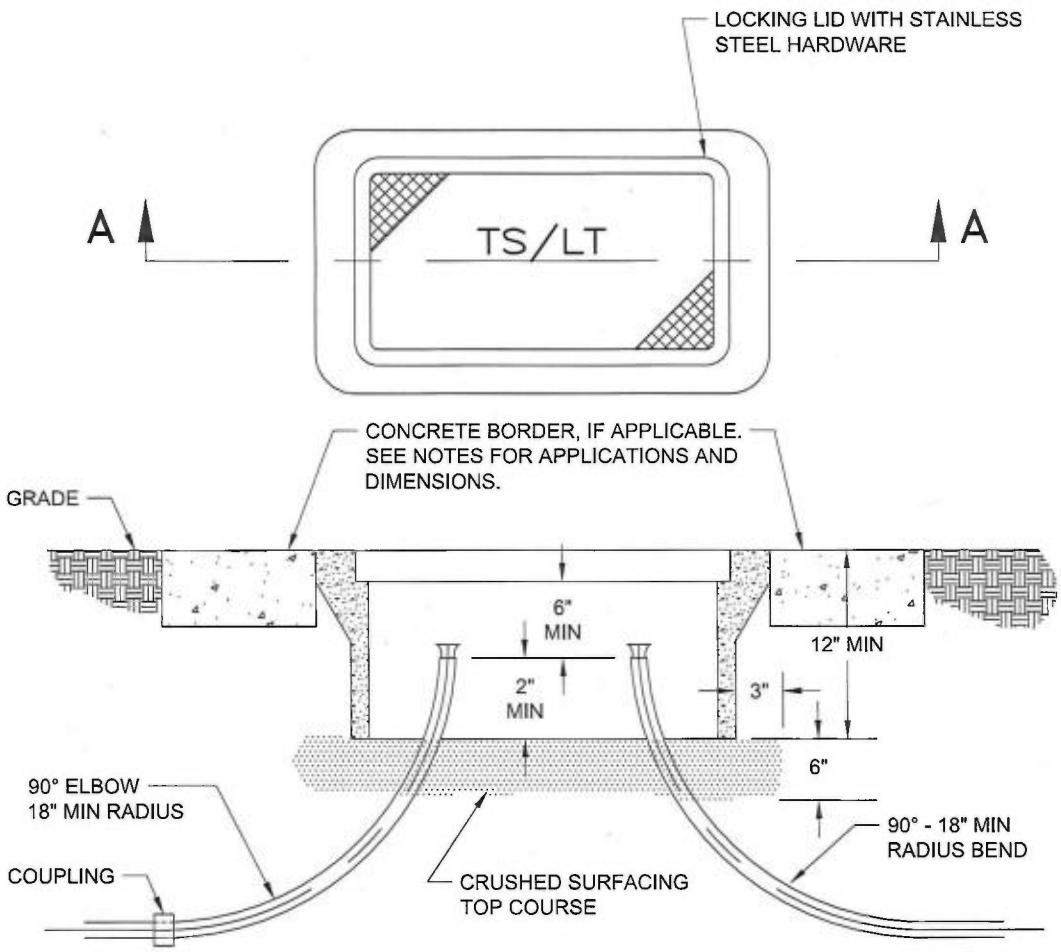

SECTION A-A

NOTES:

1. Junction boxes shall be concrete and in conformance with WSDOT's Type 1 and 2 Locking Lid Standard Duty Junction Box. Box and lid will be load rated for traffic and shall have a nonskid surface. The lid shall be marked "TS", "LT", or other designation as called for on the proposal.
2. All junction boxes containing interconnect cable will be Type 2 or larger.
3. Boxes shall be set on a base of 6 inch crushed surfacing top course for drainage.
4. Metal lids will be grounded. Ground conductor shall be a minimum 24 inches long.
5. Care shall be taken to place junction boxes outside of areas heavily used by pedestrians, especially near crosswalks and corners.
6. Junction boxes shall not be placed in curb ramps or areas subject to vehicular traffic.
7. Adjacent junction boxes will be separated by a minimum of 3 inches.
8. Install pulling bells or bushings on conduit ends.

CONCRETE BORDER APPLICATION AND DIMENSION:

1. For junction boxes bordered by less than 12 inches wide of concrete or asphalt section, a concrete border is required.
2. Junction boxes located in asphalt will be secured on all sides with a minimum 12 inch wide by 6 inch deep concrete section.
3. Junction boxes located in concrete will be secured on all sides with a minimum 12 inch wide concrete section. The depth of the concrete shall meet the depth of the adjacent concrete. The concrete will be finished in the same manner as the adjacent concrete, where applicable.
4. Junction boxes located in a planter strip, landscaped area, or other non-hardened surface will be secured on all sides with a minimum 6 inch wide by 12 inch deep concrete section flush with the top of the junction box.

REVIEWED BY		APPROVED FOR PUBLICATION	CITY OF TACOMA JUNCTION BOX INSTALLATION TYPICAL
DCS PUBLIC WORKS	GMS ENVIRONMENTAL SERVICES		
N/A TACOMA POWER	N/A TACOMA WATER	CITY ENGINEER — DATE 5/31/17	STANDARD PLAN NO. TS-08

Application

Precast concrete vault descriptions, applications and accessories used in Tacoma Power's underground system.

Vault Applications

	Vault Type											
Application	**233**	**444**	**554**	**684**	**687**	**774**	**810**	**5106**	**814**	**818**	**10X20**	**E3**
Commercial Secondary Service	■		■			■						■
1Ø Junction Box		■										
3Ø Junction Box			■									
1Ø PM Tfmr 25 to 75 kVA		■										
1Ø PM Tfmr 100 to 167 kVA			■									
3Ø PM Tfmr, 45 to 300 kVA			■									
3Ø PM Tfmr 500 to 2500 kVA						■						
1-position in & out vacuum switch cabinet			■									
3Ø Primary Metering Cabinet						■						
Secondary Service Cabinet						■						
Feeder Splice Vault, Single Circuit				■								
Feeder Splice Vault, Multiple Circuits					■		■					
Switchgear Vault, Padmount							■					
Urban Junction Box								■				
Feeder Junction Box									■	■		
Switchgear Vault, Submersible											■	
Feeder Pull Vault, Multiple Circuits										■	■	
Maintenance Only												■

General Notes

- All vaults and covers (*except for 233 and E3 vaults*) shall be self-grounding (internally grounded), concrete-encased electrodes with grounding/bonding inserts, meeting all the provisions of NESC Rule 094B6.
- All vault bases, covers (*except for E3 covers*), doors and risers shall be constructed to AASHTO H20 traffic loading or better.
- All doors (hatches) rated for off-street/incidental (unintentional) traffic locations only.
- Only 687, 814, 818, and 10x20 vaults with manhole covers able to be placed in traffic locations.
- All vault covers shall have Meadow-Burke fittings at each corner according to manufacturer's specifications.
- All weights listed are approximate only.

233 Vault

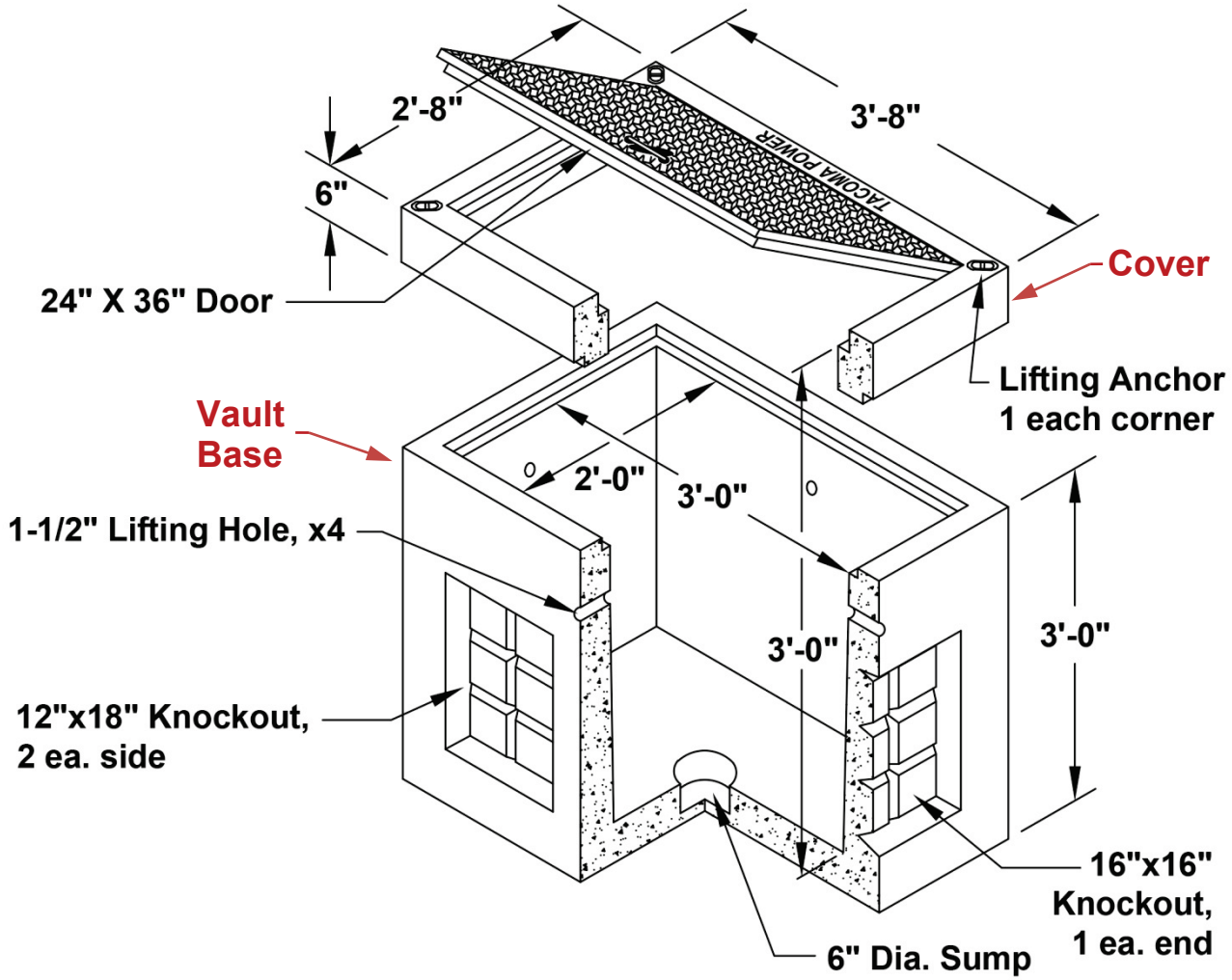

DESCRIPTION: Vault, concrete, type 233, 3ft-8in x 2ft-8in x 3ft base, cover is 2ft-8in x 3ft-8in x 6in with 24in x 36in hinged diamond plate aluminum door, knockouts shall be minimum 16in x 16in each end and minimum 12in x 18in – two (2) sets each side

Material	MID#
233 Vault Base (2,000 lbs)	35057
233 Vault Cover Standard (450 lbs)	34669
233 Vault Cover Non-skid (450 lbs)	34671
233 Riser, 6in (290 lbs)	39828

APPLICATION: Commercial Secondary Service Box.

444 Vault

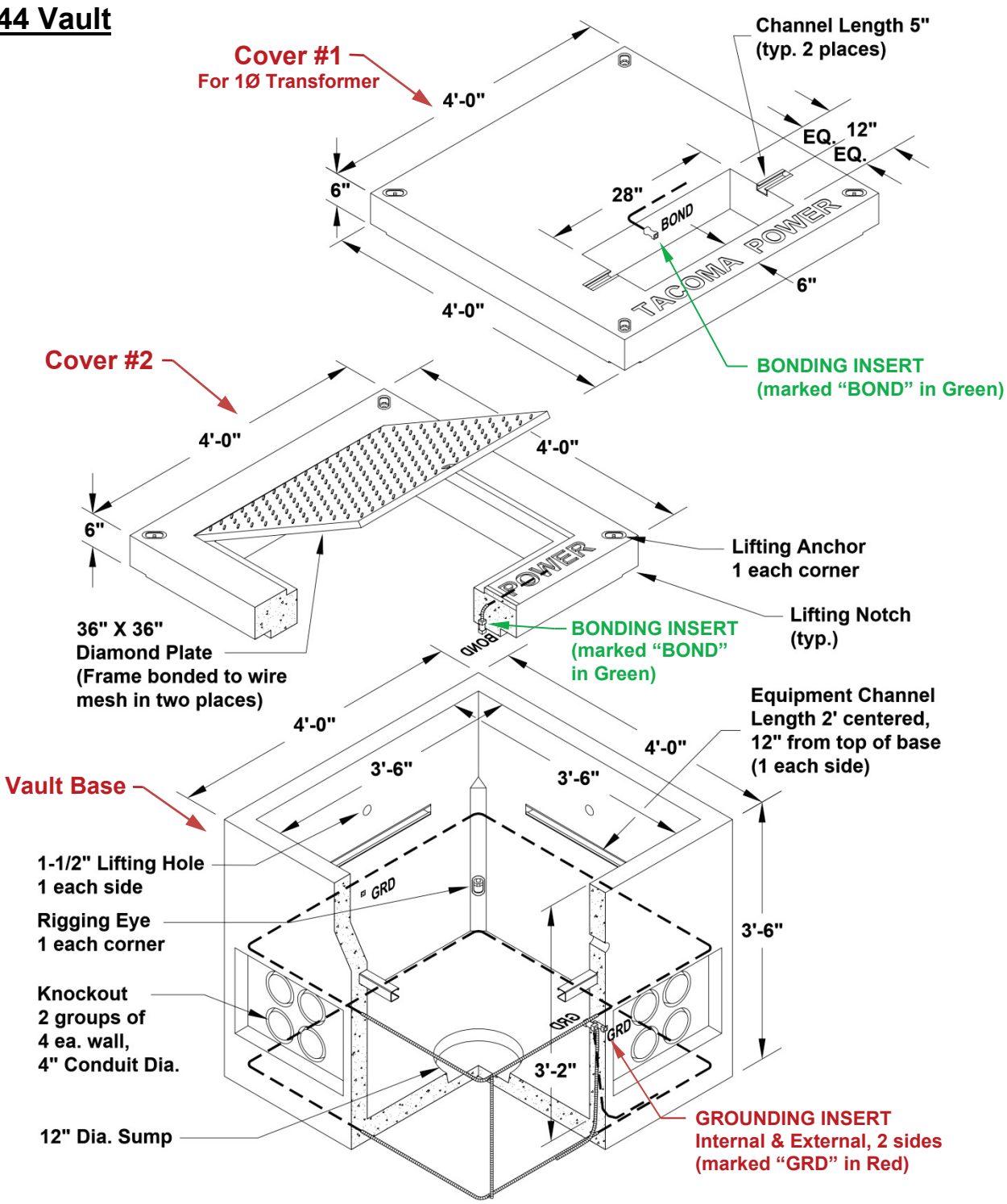

DESCRIPTION: Vault, concrete, type 444, 4ft x 4ft x 3ft-6in base, junction box cover #2 is 4ft x 4ft x 6in with 3ft x 3ft hinged diamond plate aluminum door, transformer cover #1 is 4ft x 4ft x 6in with 12in x 28in blockout opening

444 Vault *(continued)*

Material	MID#
444 Vault Base (4,000 lbs)	21163
444 Transformer Cover #1 (for 1Ø Transformers 25 to 75 kVA) (900 lbs)	19451
444 Transformer Cover #1 (for 1Ø Transformers 25 to 75 kVA), Blockout Opening Formed as a Knockout * (900 lbs)	46371
444 Junction Box Cover #2 Standard (900 lbs)	19447
444 Junction Box Cover #2 Non-Skid (900 lbs)	19449
444 Riser, 6in (440 lbs)	39970
444 Riser, 12in (1100 lbs)	43252

* Special order only

APPLICATION: 1Ø Junction Box, Small 1Ø Padmount Transformers (25 kVA to 75 kVA).

554 Vault

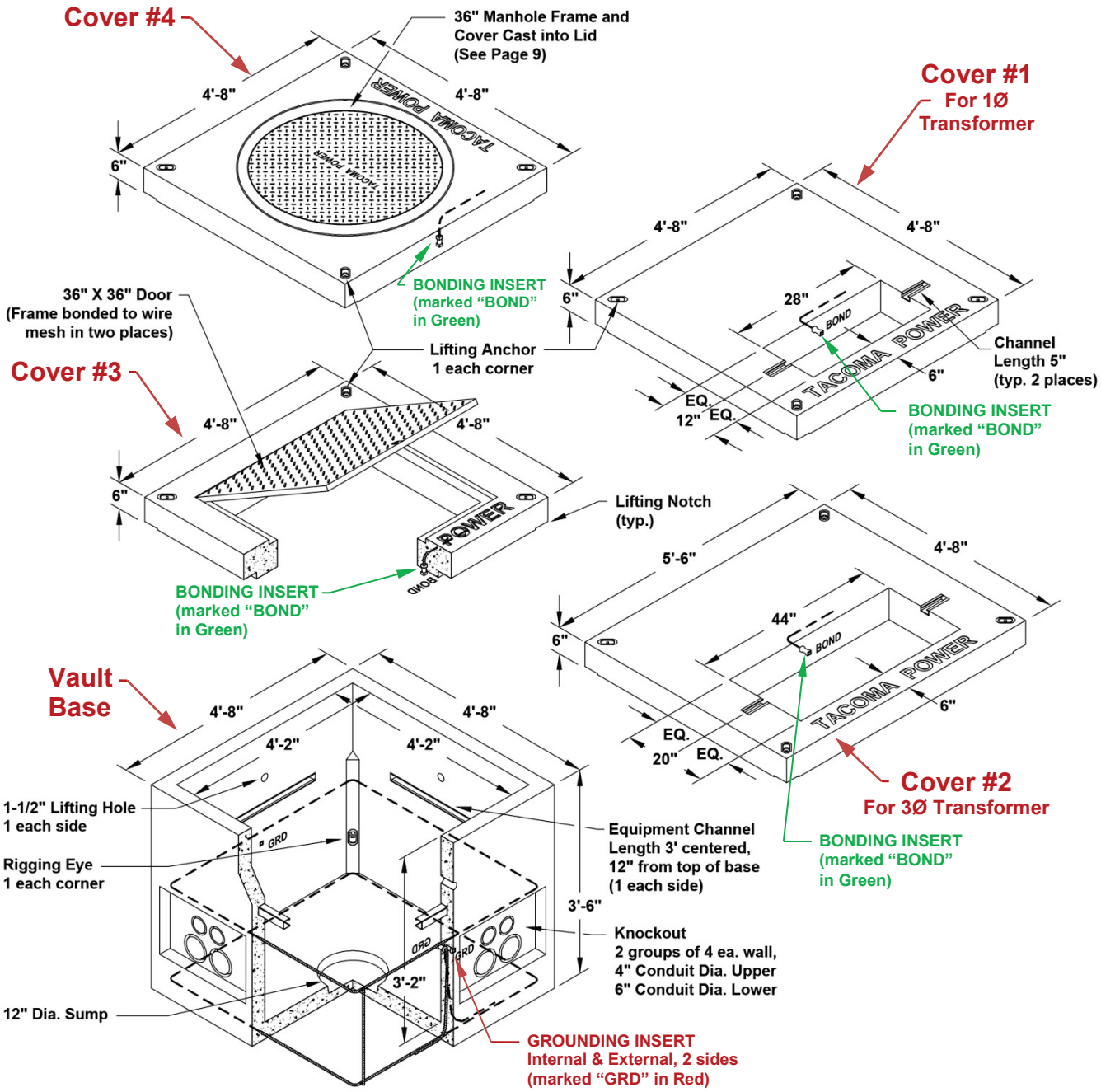

DESCRIPTION: Vault, concrete, type 554, 4ft-8in x 4ft-8in x 3ft-6in base, single-phase transformer cover #1 is 4ft-8in x 4ft-8in x 6in with 12in x 28in blockout opening, three-phase transformer cover #2 is 5ft-6in x 4ft-8in x 6in with 20in x 44in blockout opening, junction box cover #3 is 4ft-8in x 4ft-8in x 6in with 3ft x 3ft hinged diamond plate aluminum door, junction box cover #4 is 4ft-8in x 4ft-8in x 6in with integral 36in manhole frame and cover

554 Vault *(continued)*

Material	MID#
554 Vault Base (4,000 lbs)	21165
554 Transformer Cover #1 for 1Ø Transformers 100 to 167 kVA (1,630 lbs)	19457
554 Transformer Cover #2 for 3Ø Transformers 45 to 300 kVA and 1-Position In & Out Vacuum Switch Cabinet (1,550 lbs)	19459
554 Junction Box Cover #3 Standard (1,400 lbs)	19453
554 Junction Box Cover #3 Non-skid (1,400 lbs)	19455
554 Junction Box Cover with 36in Manhole Frame and Cover #4 (1,250 lbs)	64807
554 Riser, 6in (540 lbs)	39972
554 Riser, 12in (1,100 lbs)	43254

APPLICATION: 3Ø Junction Box, Large 1Ø Transformers (100 kVA to 167 kVA), Small 3Ø Transformers (45 kVA to 300 kVA), 1-Position In & Out Vacuum Switch Cabinet or Commercial Secondary Service Box.

Note: 554 vault with 36in manhole cover not intended for traffic locations. Place in parking lot, driveway or alley way locations only.

684 Vault

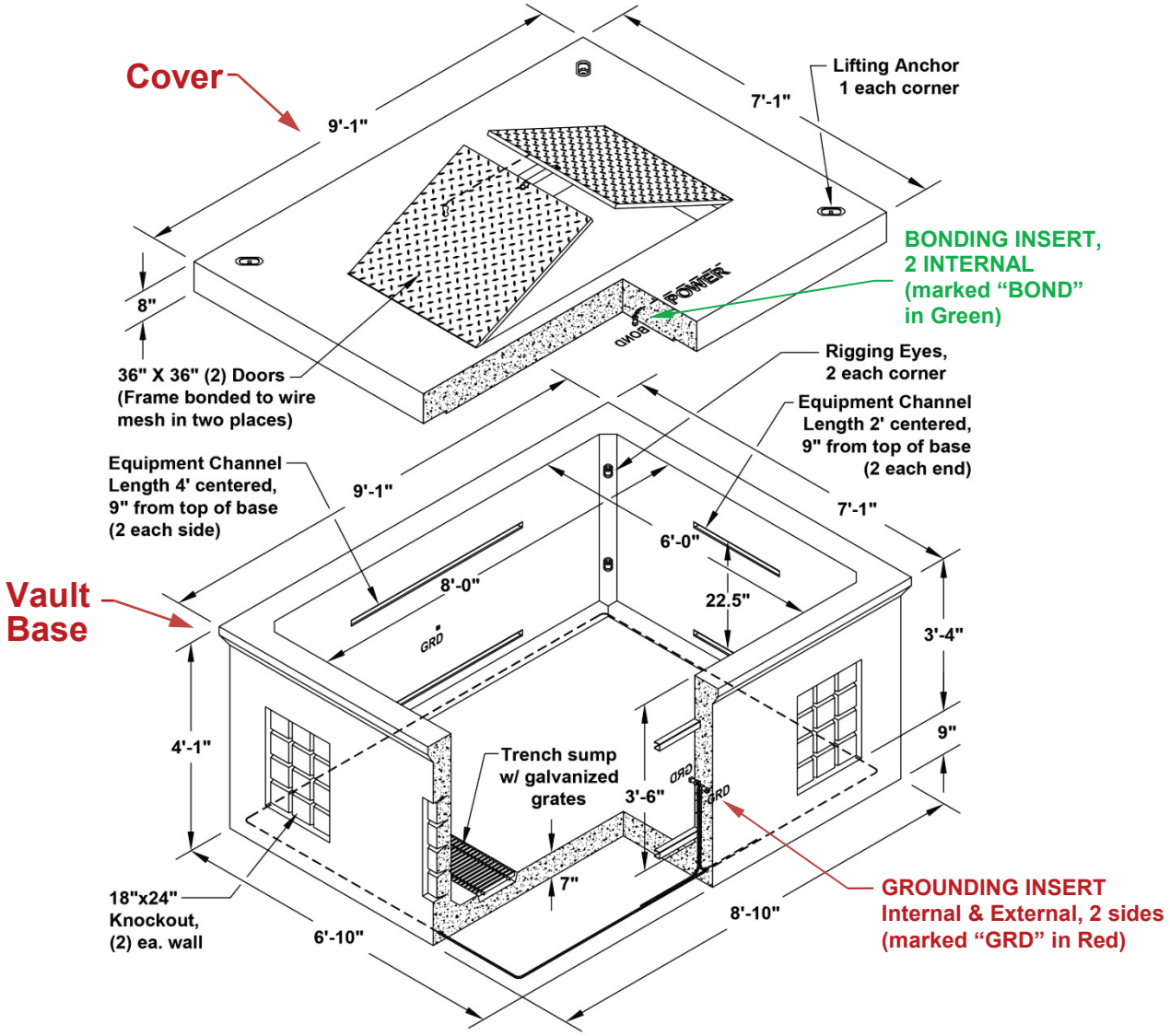

DESCRIPTION: Vault with cover, concrete, type 684, 9ft-1in x 7ft-1in x 4ft-9in, two (2) 3ft x 3ft hinged diamond plate aluminum doors in cover

Material	MID#
684 Vault Base (11,000 lbs)	21169
684 Cover Standard (5,000 lbs)	63355
684 Cover Non-Skid (5,000 lbs)	21171

APPLICATION: Feeder splice/pull-box for single circuit for off-street/incidental (unintentional) traffic locations.

687 Vault

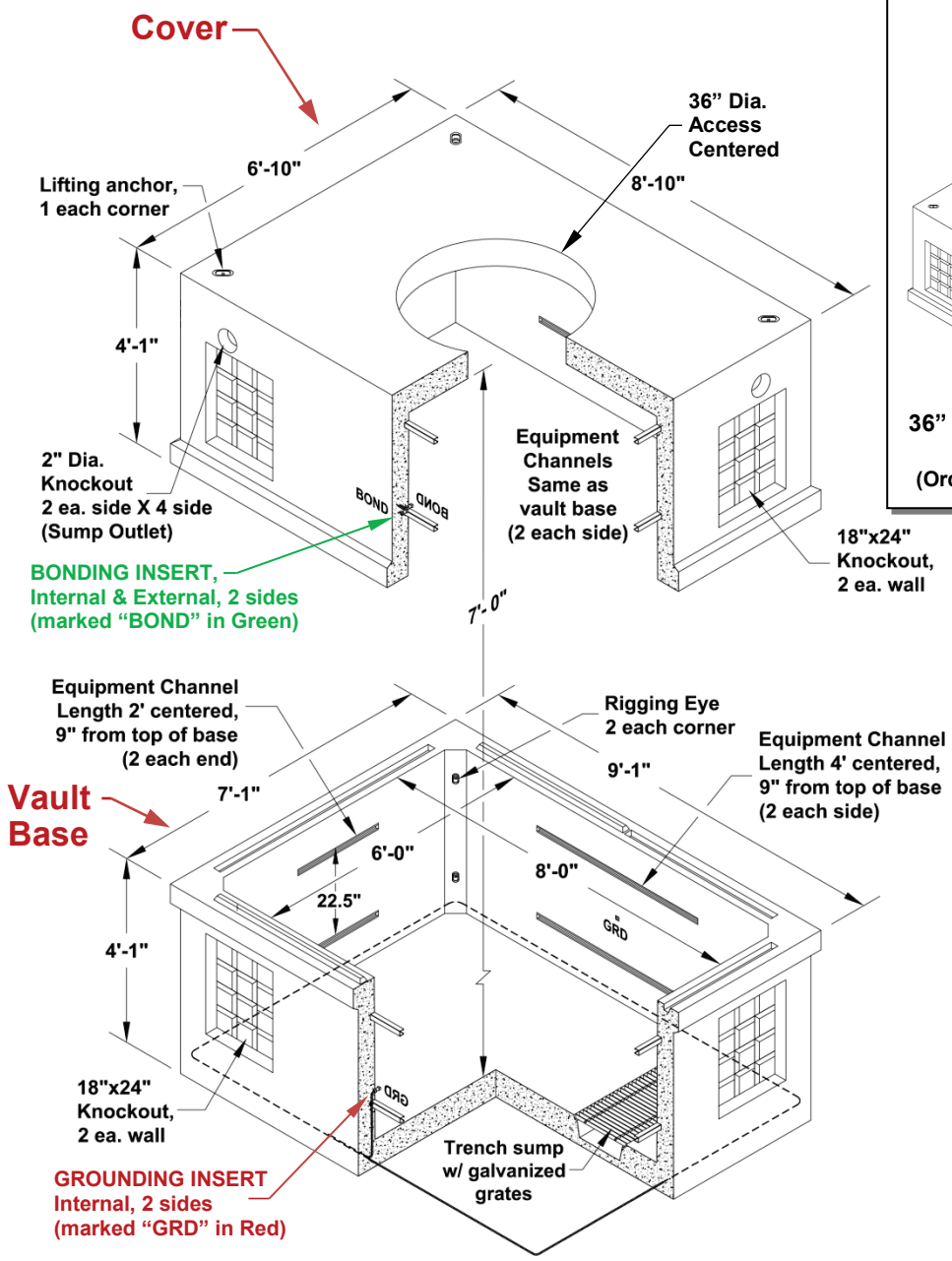

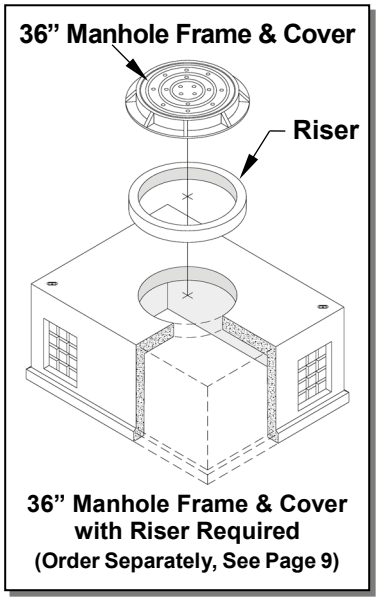

DESCRIPTION: Vault with cover, concrete, type 687, 9ft-1in x 7ft-1in x 8ft-2in, 36in manhole access

Material	MID#
687 Vault Base (10,000 lbs)	39978
687 Vault Cover with 36in Manhole Access (10,000 lbs)	63356

APPLICATION: Feeder splice/pull-box for multiple circuits for traffic locations.

Manhole Frame and Cover, 36in, H20 Traffic Loading

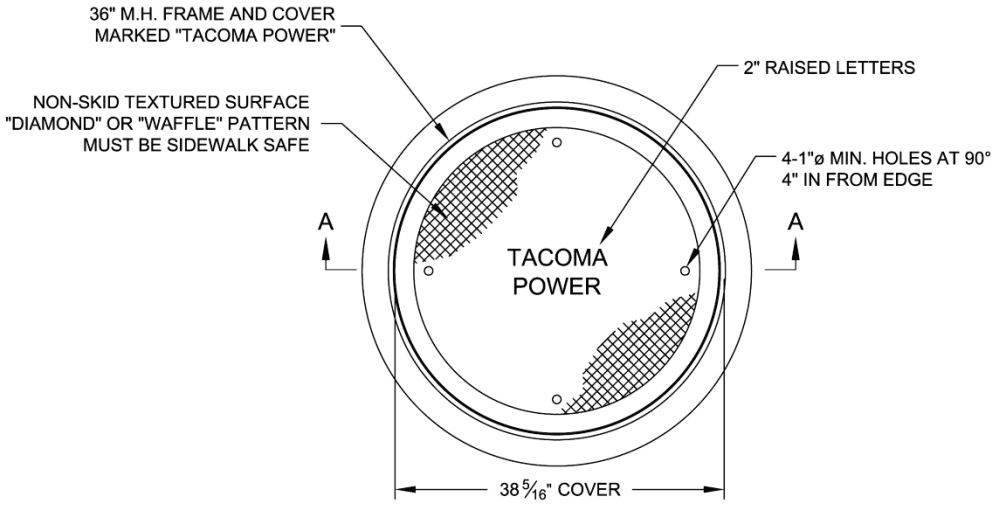

36" M.H. FRAME W/COVER STD H20 LOADING

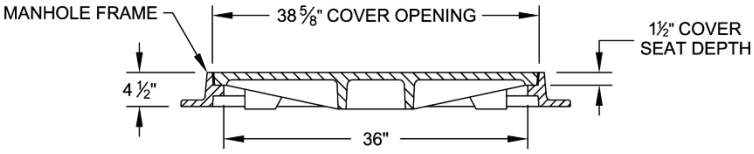

SECTION A-A

DESCRIPTION: Frame and cover, manhole, 36in, rated for H20 traffic loading, to meet AASHTO Designation M306-10, cover is 38-5/16in diameter, ductile iron, to have four (4) 1in dia. lifting holes, lettered “TACOMA POWER” in 2in raised letters, frame is gray iron, all such castings are to be the EJ 1581 series or approved equal

Material	MID#
Manhole Frame and Cover, 36in, H20 Loading (550 lbs)	20558
Manhole Cover only, 36in, H20 Loading (375 lbs)	19426
Riser, 4in * (340 lbs)	39976

* also available in 6in and 12in from vendor

APPLICATION: Manhole access cover for 687 vaults in traffic locations.

Note: 554 vault with 36in manhole frame and cover not intended for traffic locations. Placement in parking lot, driveway or alley way locations is acceptable.

774 Vault

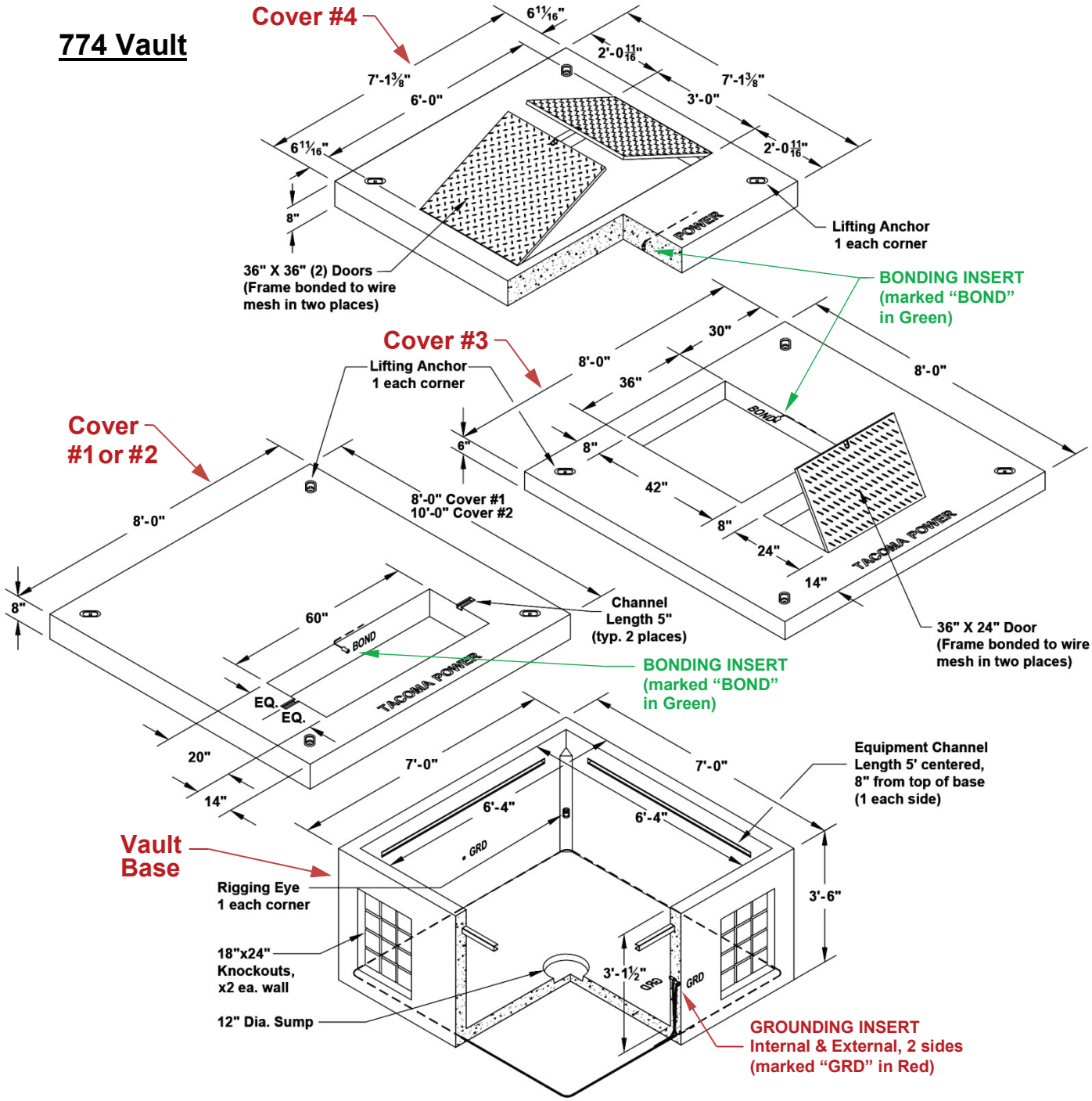

DESCRIPTION: Vault, concrete, type 774, 7ft x 7ft x 3ft-6in base, 3Ø transformer/primary metering cabinet cover #1 is 8ft x 8ft x 8in with 20in x 60in blockout opening, 3Ø transformer cover #2 is 8ft x 10ft x 8in with 20in x 60in blockout opening, secondary service cabinet cover #3 is 8ft x 8ft x 6in with 3ft x 2ft hinged diamond plate aluminum door and 36in x 42in blockout opening, secondary service box cover #4 is 7ft-1in x 7ft-1in x 8in with two (2) 3ft x 3ft hinged diamond plate aluminum doors

774 Vault *(continued)*

Material	MID#
774 Vault Base (7,500 lbs)	21167
774 Transformer (500 kVA to 1500 kVA) or Primary Meter Cabinet Cover #1, 8ft x 8ft (5,600 lbs)	19461
774 Transformer (2000 kVA to 2500 kVA) Cover #2, 8ft x 10ft (7,200 lbs)	19463
774 Secondary Service Cabinet Cover #3 (5,000 lbs)	50893
774 Secondary Service Box Cover #4 Standard (4,000 lbs)	67541
774 Secondary Service Box Cover #4 Non-skid (4,000 lbs)	67540
774 Riser, 6in (1,200 lbs)	39974
774 Riser, 12in (2,000 lbs)	43256

APPLICATION: Large 3Ø Transformers (500 kVA to 2500 kVA), 3Ø Primary Metering Cabinet, Secondary Service Cabinet, or Commercial Secondary Service Box.

810 Vault

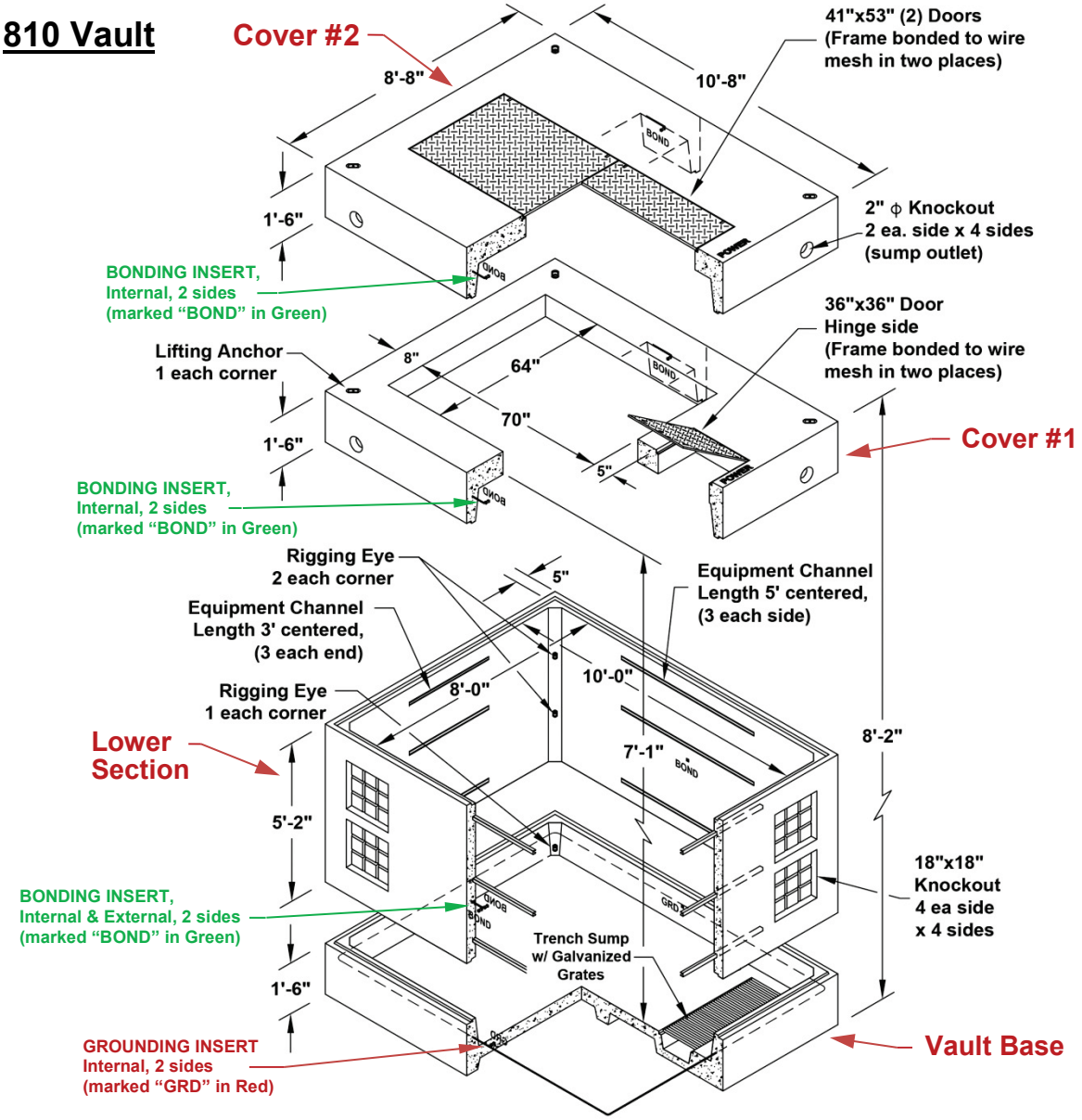

DESCRIPTION: Vault with cover, concrete, type 810, 10ft-8in x 8ft-8in x 8ft-2in, padmount switchgear cover #1 is 8ft-8in x 10ft-8in x 1ft-6in with 3ft x 3ft hinged diamond plate aluminum door and 70in x 64in blockout opening, splice vault cover #2 has two (2) 41in x 53in hinged diamond plate doors

Material	MID#
810 Vault (Vault Base 10,200 lbs / Lower Section 9,200 lbs)	60564
810 Switchgear Cover #1 Standard (9,200 lbs)	63354
810 Switchgear Cover #1 Non-Skid (9,200 lbs)	60566
810 Splice Vault Cover #2 Non-Skid (7,900 lbs)	39980

APPLICATION: Padmount Switchgear or Feeder splice/pull-box for off-street/incidental (unintentional) traffic locations.

810 Riser/Reducer – Use with Type 10 Padmount Switchgear

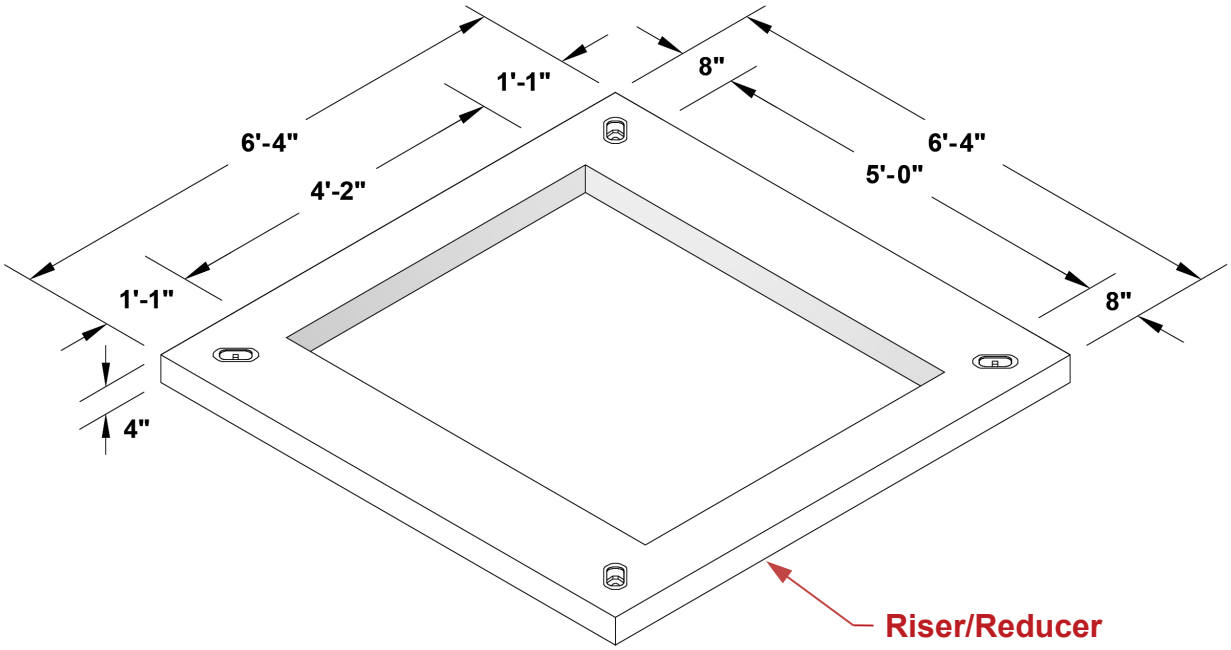

DESCRIPTION: Riser/Reducer, 6ft-4in x 6ft-4in with 5ft x 4ft-2in blockout

Material	MID#
810 Riser/Reducer (1,000 lbs)	70489

APPLICATION: Place riser/reducer on top of switchgear cover #1 when need to place Type 10 padmount switchgear onto 810 vault.

5106 Vault

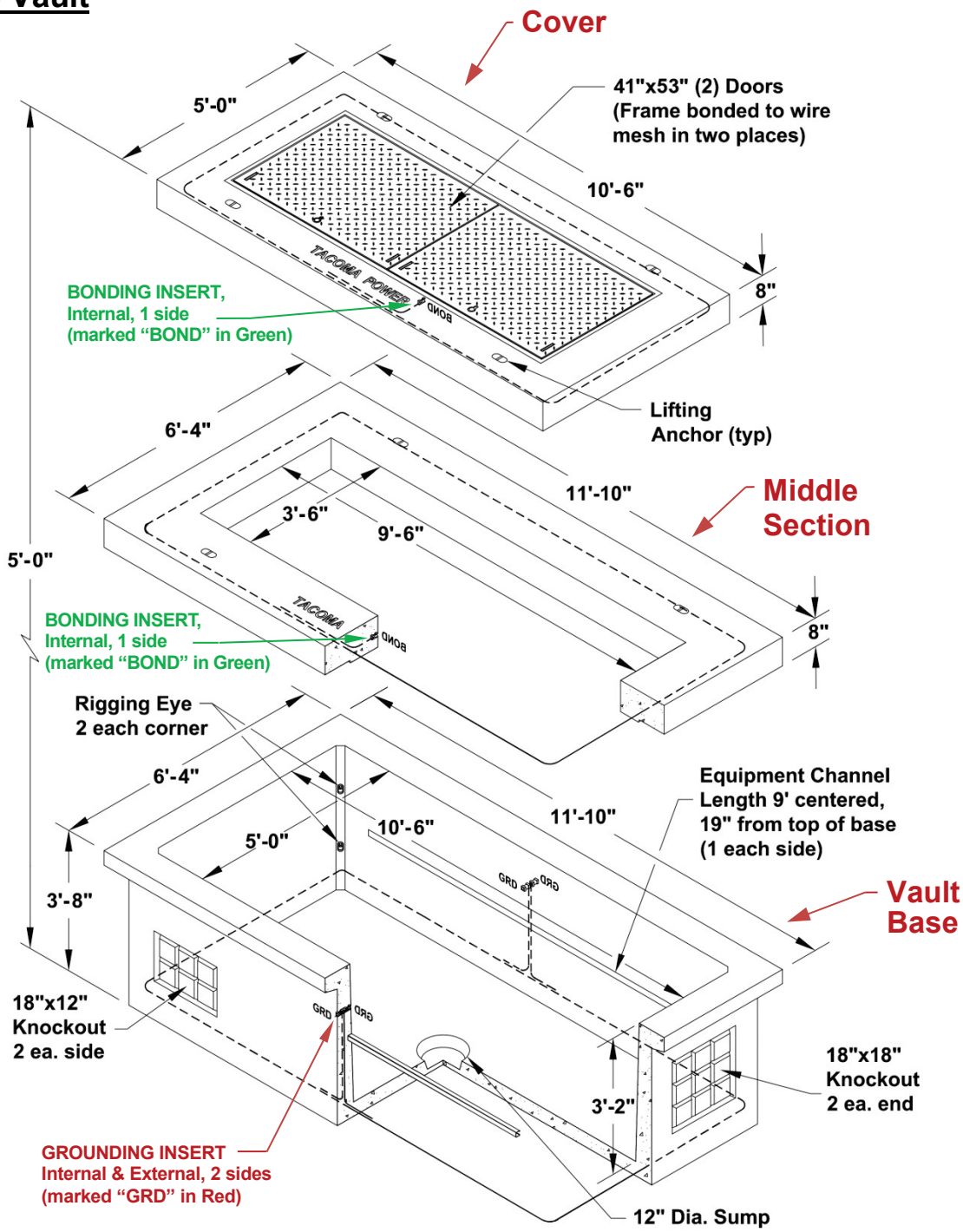

DESCRIPTION: Vault base with cover and middle section, concrete, Type 5106, 11ft-10in x 6ft-4in x 3ft-8in base with 11ft-10in x 6ft-4in x 8in riser and 10ft-6in x 5ft x 6in cover, cover has two (2) (2) 41in x 53in hinged diamond plate aluminum doors

5106 Vault *(continued)*

Material	MID#
5106 Vault Base (10,000 lbs) with Cover Non-Skid (3,500 lbs) and 8in Middle Section (3,500 lbs)	48250

APPLICATION: Used in urban sidewalks for high load density areas (i.e. multi-floor buildings and/or numerous commercial and residential customers) where outage coordination for a new service installation would be difficult. All three (3) tap boxes placed on same sidewall providing enough working room to pull new customer cables into an energized junction box avoiding outages to existing customers.

814 Vault

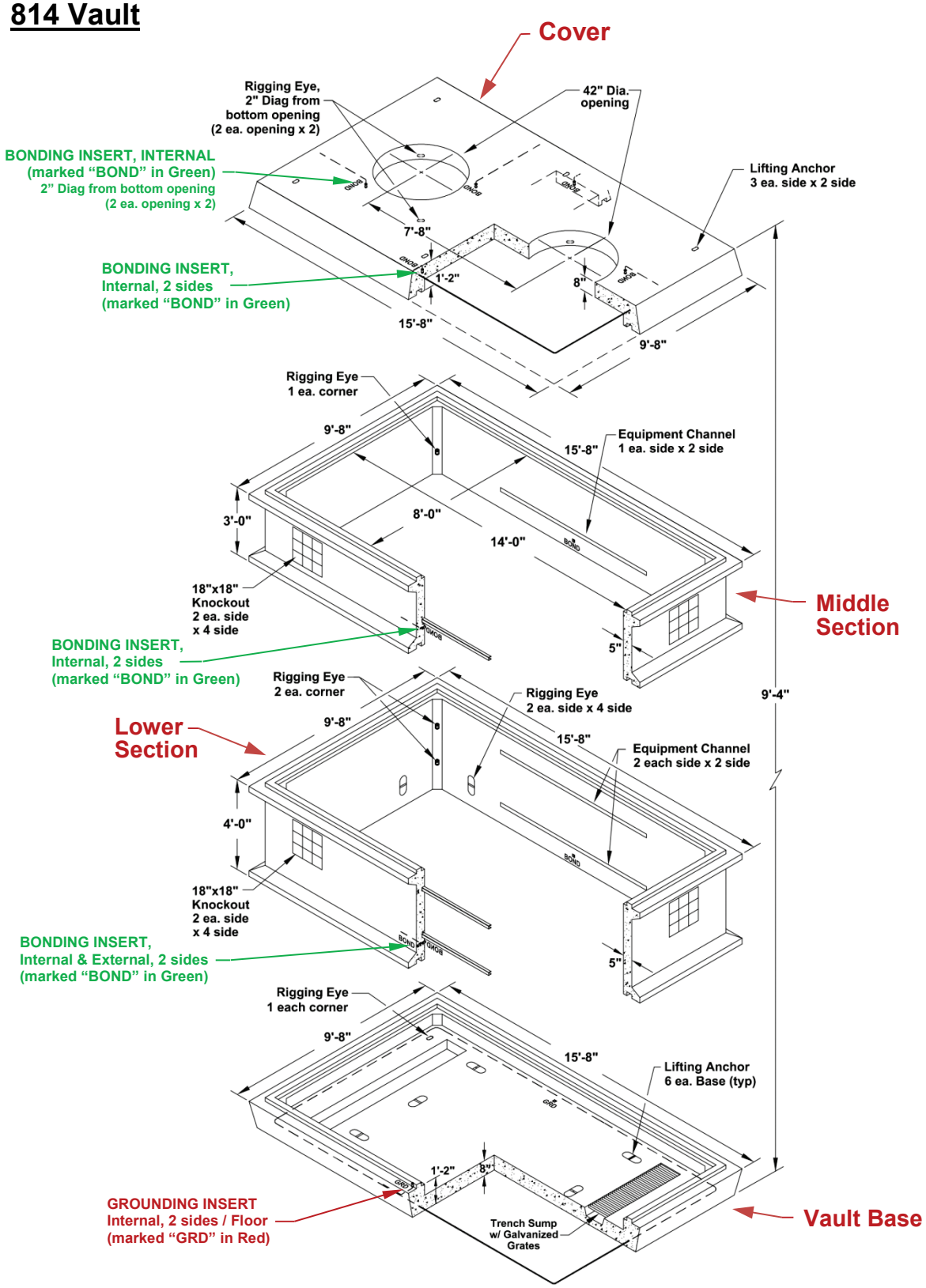
Cover
Rigging Eye, 2" Diag from bottom opening (2 ea. opening x 2)
42" Dia. opening
BONDING INSERT, INTERNAL (marked "BOND" in Green) 2" Diag from bottom opening (2 ea. opening x 2)
Lifting Anchor 3 ea. side x 2 side
7'-8"
BONDING INSERT, Internal, 2 sides (marked "BOND" in Green)
1'-2"
8"
15'-8"
9'-8"
Rigging Eye 1 ea. corner
9'-8"
15'-8"
Equipment Channel 1 ea. side x 2 side
3'-0"
8'-0"
14'-0"
18"x18" Knockout 2 ea. side x 4 side
Middle Section
BONDING INSERT, Internal, 2 sides (marked "BOND" in Green)
5"
Rigging Eye 2 ea. corner
Rigging Eye 2 ea. side x 4 side
9'-4"
Lower Section
9'-8"
15'-8"
Equipment Channel 2 each side x 2 side
4'-0"
18"x18" Knockout 2 ea. side x 4 side
BONDING INSERT, Internal & External, 2 sides (marked "BOND" in Green)
5"
Rigging Eye 1 each corner
9'-8"
15'-8"
Lifting Anchor 6 ea. Base (typ)
1'-2"
8"
GROUNDING INSERT Internal, 2 sides / Floor (marked "GRD" in Red)
Trench Sump w/ Galvanized Grates
Vault Base

814 Vault *(continued)*

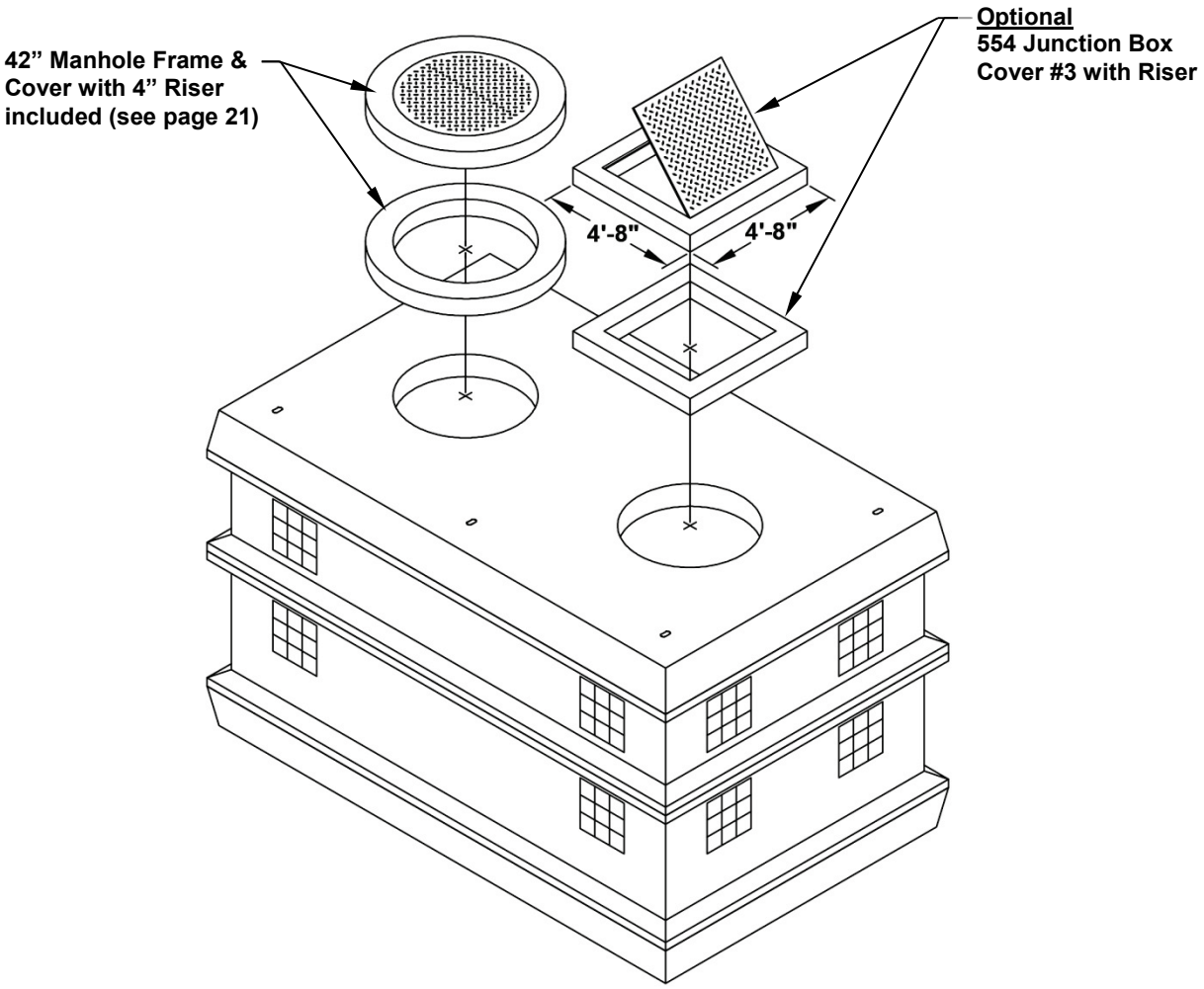

DESCRIPTION: Vault with cover, concrete, type 814, 15ft-8in x 9ft-8in x 9ft-4in, with two (2) 42in manhole access in cover, two (2) 42in manhole frame and cover and 4" concrete riser included

Material	MID#
814 Vault (Vault Base 17,000 lbs / Lower Section 11,700 lbs / Middle Section 9,200 lbs) and Cover (16,000 lbs) with two (2) 42in manhole access, two (2) 42in manhole frame and cover and 4" concrete riser included	48256

APPLICATION: 600A UG feeder junction box or feeder pull vault for multiple circuits. For off-street/incidental (unintentional) traffic locations, use 554 Junction Box Cover #3 (standard MID 19453 or non-skid MID 19455) with 554 riser(s) (6in MID 39972 or 12in MID 43254). In traffic areas, use the 42" manhole frame & cover (MID 67978) with 4in riser(s) (MID 68010). Risers are used to set the vault deep enough to allow for future street and sidewalk grinding/grade adjustment.

818 Vault

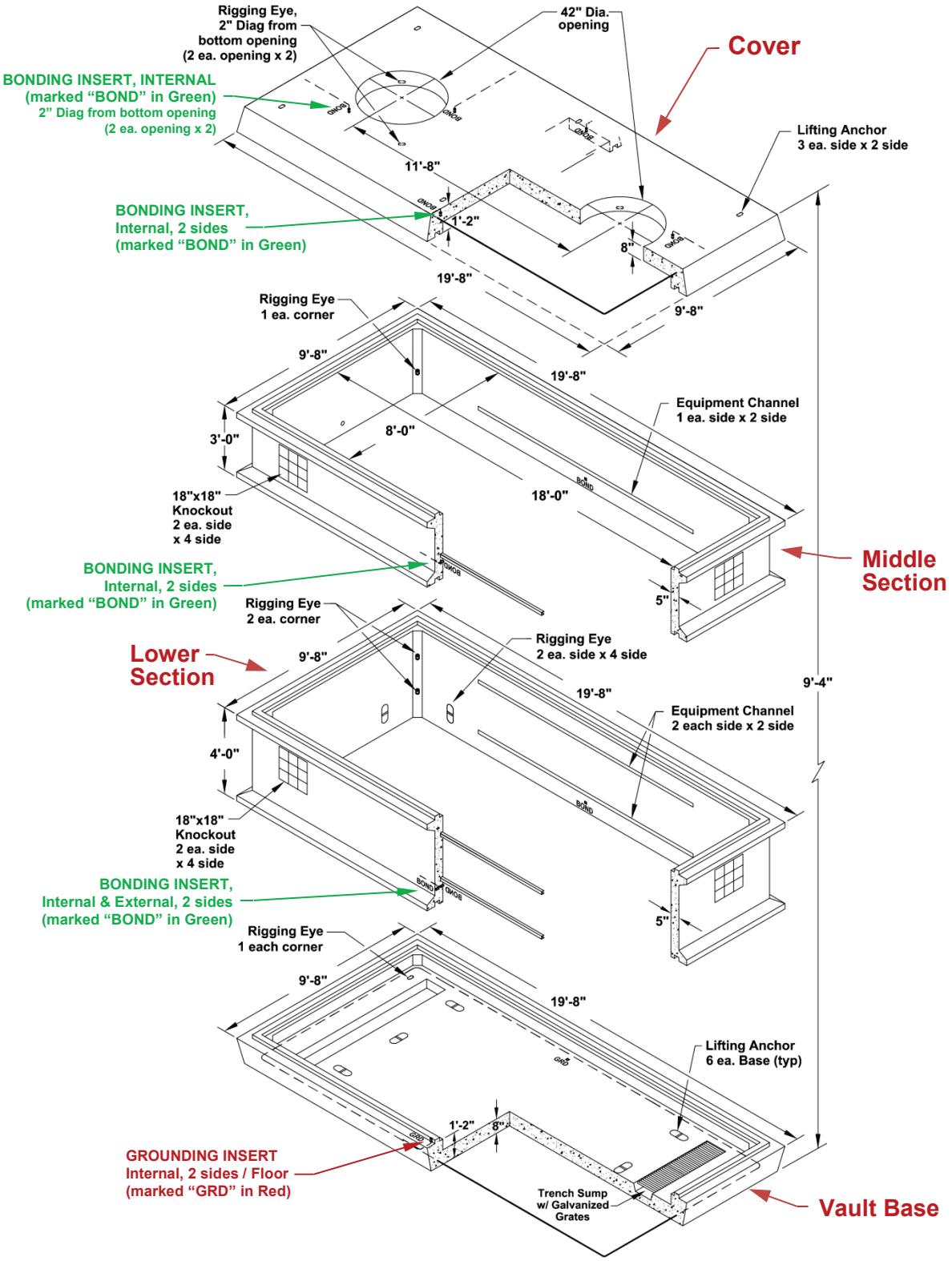
Rigging Eye, 2" Diag from bottom opening (2 ea. opening x 2)
42" Dia. opening
Cover
BONDING INSERT, INTERNAL (marked "BOND" in Green) 2" Diag from bottom opening (2 ea. opening x 2)
Lifting Anchor 3 ea. side x 2 side
11'-8"
BONDING INSERT, Internal, 2 sides (marked "BOND" in Green)
1'-2"
8"
19'-8"
9'-8"
Rigging Eye 1 ea. corner
9'-8"
19'-8"
Equipment Channel 1 ea. side x 2 side
3'-0"
8'-0"
18"x18" Knockout 2 ea. side x 4 side
18'-0"
Middle Section
BONDING INSERT, Internal, 2 sides (marked "BOND" in Green)
5"
Rigging Eye 2 ea. corner
Lower Section
9'-8"
Rigging Eye 2 ea. side x 4 side
19'-8"
9'-4"
Equipment Channel 2 each side x 2 side
4'-0"
18"x18" Knockout 2 ea. side x 4 side
BONDING INSERT, Internal & External, 2 sides (marked "BOND" in Green)
5"
Rigging Eye 1 each corner
9'-8"
19'-8"
Lifting Anchor 6 ea. Base (typ)
1'-2"
8"
GROUNDING INSERT Internal, 2 sides / Floor (marked "GRD" in Red)
Trench Sump w/ Galvanized Grates
Vault Base

818 Vault *(continued)*

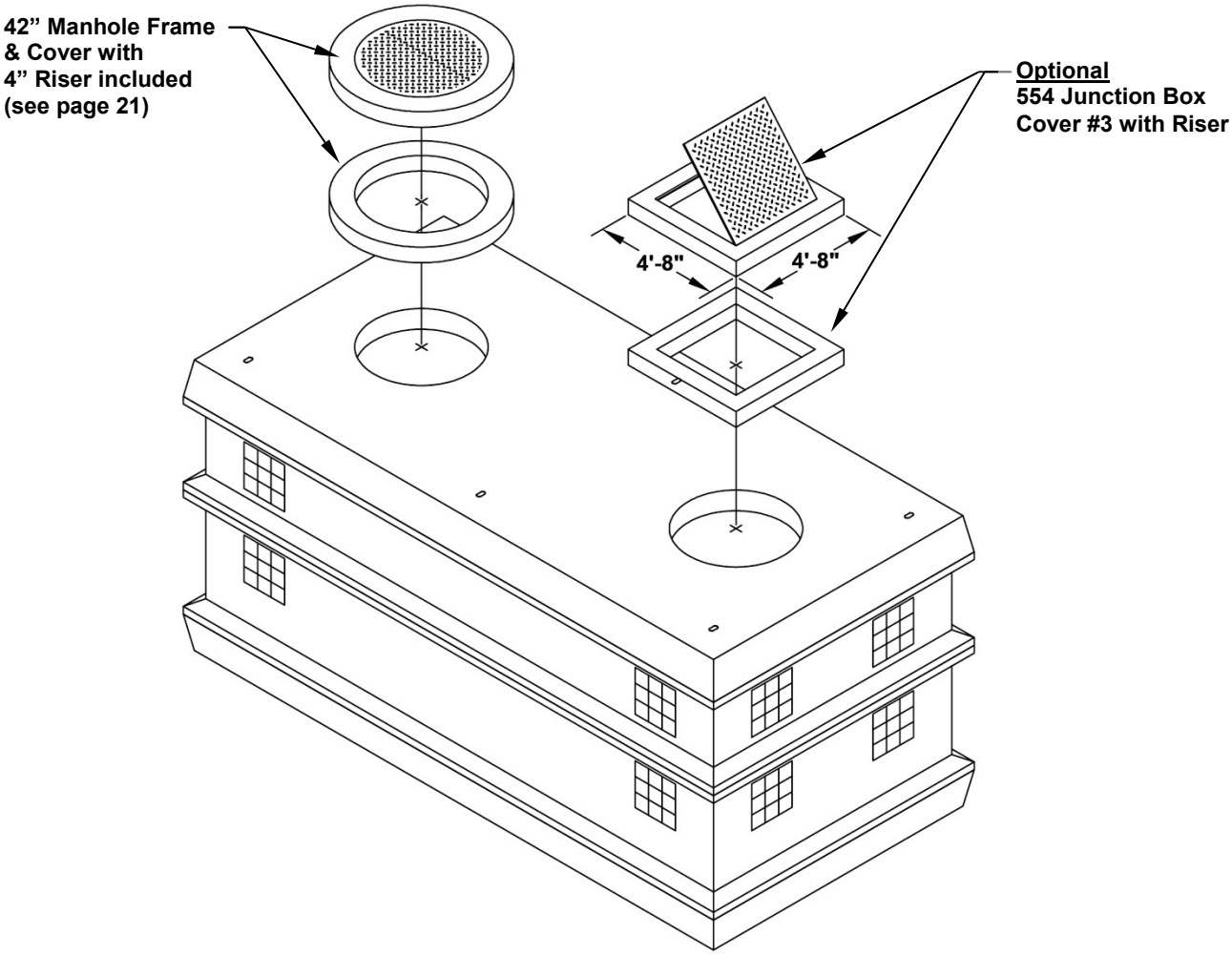

DESCRIPTION: Vault with cover, concrete, type 818, 19ft-8in x 9ft-8in x 9ft-4in, with two (2) 42in manhole access in cover, two (2) 42in manhole frame and cover and 4" concrete riser included

Material	MID#
818 Vault (Vault Base 16,700 lbs / Lower Section 11,700 lbs / Middle Section 9,200 lbs) and Cover (16,000 lbs) with two (2) 42in manhole access, two (2) 42in manhole frame and cover and 4" concrete riser included	48387

APPLICATION: 600A UG feeder junction box or feeder pull vault for multiple circuits. For off-street/incidental (unintentional) traffic locations, use 554 Junction Box Cover #3 (standard MID 19453 or non-skid MID 19455) with 554 riser(s) (6in MID 39972 or 12in MID 43254). In traffic areas, use the 42" manhole frame & cover (MID 67978) with 4in riser(s) (MID 68010). Risers are used to set the vault deep enough to allow for future street and sidewalk grinding/grade adjustment.

10X20 Vault

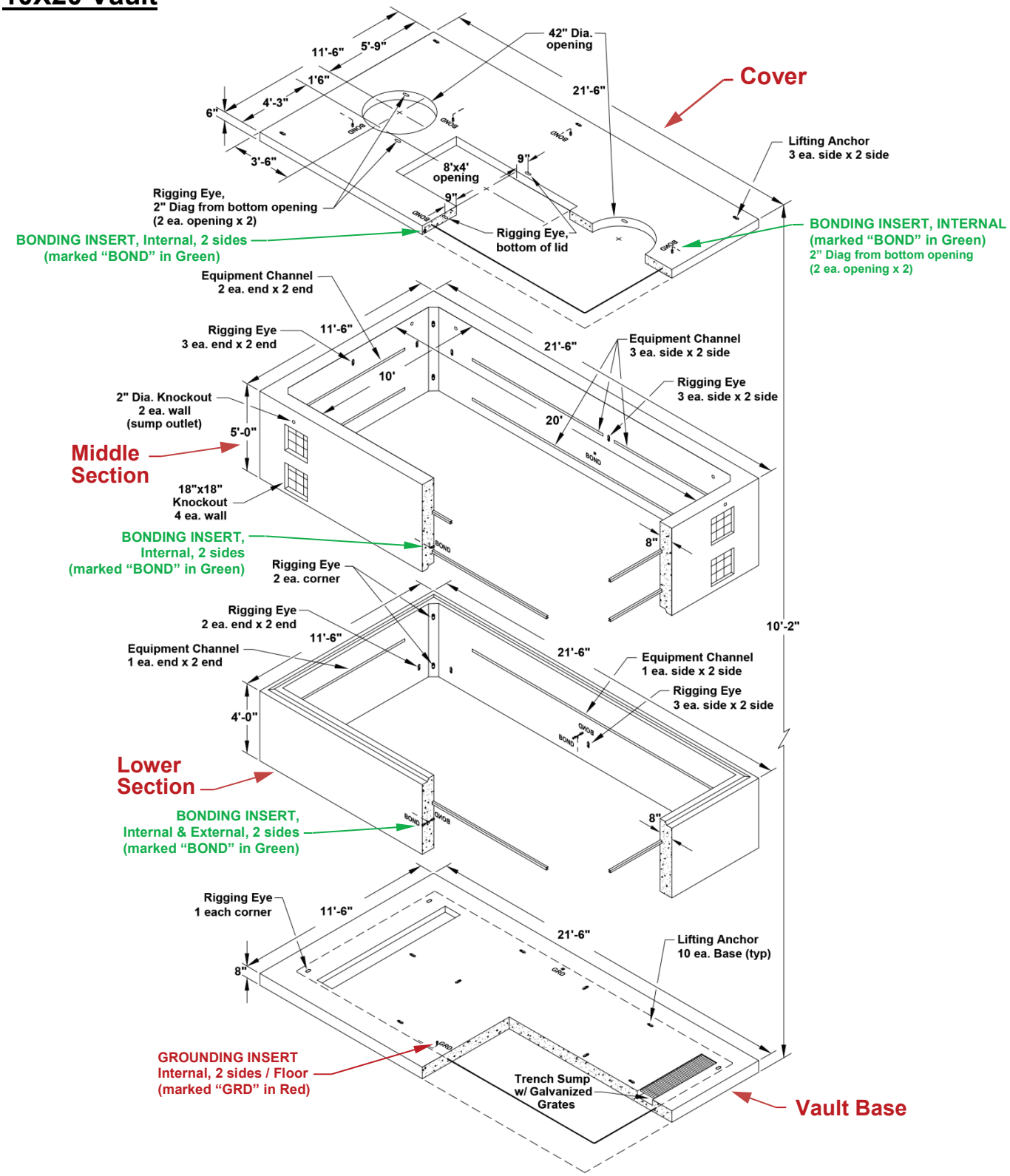
Cover
42" Dia. opening
11'-6"
5'-9"
1'6"
4'-3"
6"
3'-6"
21'-6"
8'x4' opening
9"
9"
Lifting Anchor
3 ea. side x 2 side
Rigging Eye,
2" Diag from bottom opening
(2 ea. opening x 2)
BONDING INSERT, Internal, 2 sides
(marked "BOND" in Green)
Rigging Eye,
bottom of lid
BONDING INSERT, INTERNAL
(marked "BOND" in Green)
2" Diag from bottom opening
(2 ea. opening x 2)
Equipment Channel
2 ea. end x 2 end
Rigging Eye
3 ea. end x 2 end
11'-6"
21'-6"
Equipment Channel
3 ea. side x 2 side
10'
Rigging Eye
3 ea. side x 2 side
2" Dia. Knockout
2 ea. wall
(sump outlet)
5'-0"
20'
Middle Section
18"x18"
Knockout
4 ea. wall
BONDING INSERT,
Internal, 2 sides
(marked "BOND" in Green)
8"
Rigging Eye
2 ea. corner
Rigging Eye
2 ea. end x 2 end
11'-6"
10'-2"
Equipment Channel
1 ea. end x 2 end
21'-6"
Equipment Channel
1 ea. side x 2 side
Rigging Eye
3 ea. side x 2 side
4'-0"
Lower Section
BONDING INSERT,
Internal & External, 2 sides
(marked "BOND" in Green)
8"
Rigging Eye
1 each corner
11'-6"
21'-6"
Lifting Anchor
10 ea. Base (typ)
8"
GROUNDING INSERT
Internal, 2 sides / Floor
(marked "GRD" in Red)
Trench Sump
w/ Galvanized
Grates
Vault Base

10X20 Vault *(continued)*

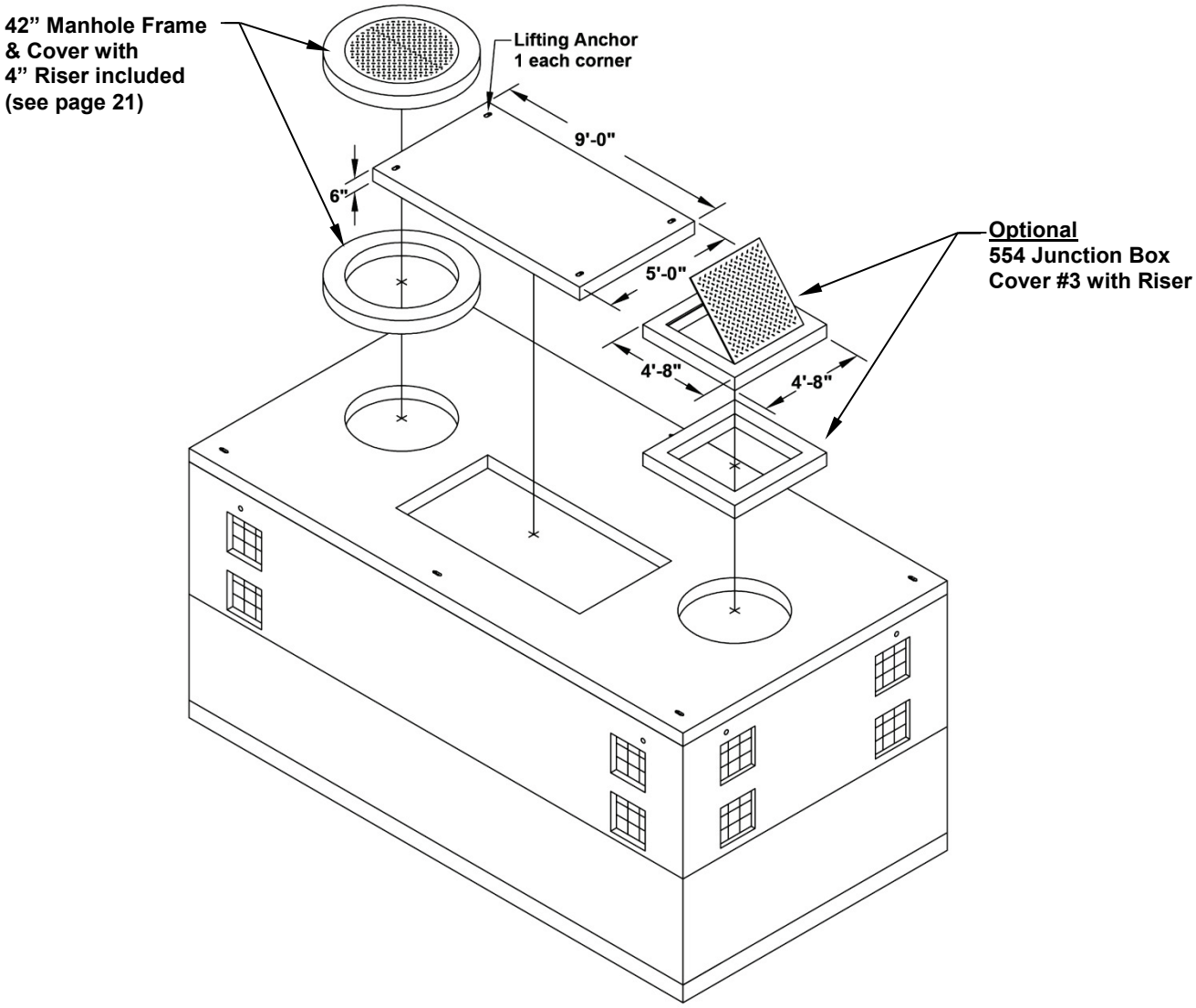

DESCRIPTION: Vault, panel, with cover, concrete, type 10' x 20', 21ft-6in x 11ft-6in x 10ft-6in, with two (2) 42in manhole access and 8ft x 4ft blockout in cover, with 9ft x 5ft cover for blockout, two (2) 42in manhole frame and cover and 4" concrete riser included

Material	MID#
10' X 20' Vault (Vault Base 24,800 lbs / Lower Section 28,350 lbs / Middle Section 35,400 lbs) and Cover (14,700 lbs) with two (2) 42in manhole access, two (2) 42in manhole frame and cover and 4" concrete riser included	48257

APPLICATION: Submersible switchgear vault with multiple feeder circuits. For off-street/incidental (unintentional) traffic locations, use 554 Junction Box Cover #3 (standard MID 19453 or non-skid MID 19455) with 554 riser(s) (6in MID 39972 or 12in MID 43254). In traffic areas, use the 42" manhole frame & cover (MID 67978) with 4in riser(s) (MID 68010). Risers are used to set the vault deep enough to allow for future street and sidewalk grinding/grade adjustment.

Manhole Frame and Cover, 42in, H20 Traffic Loading

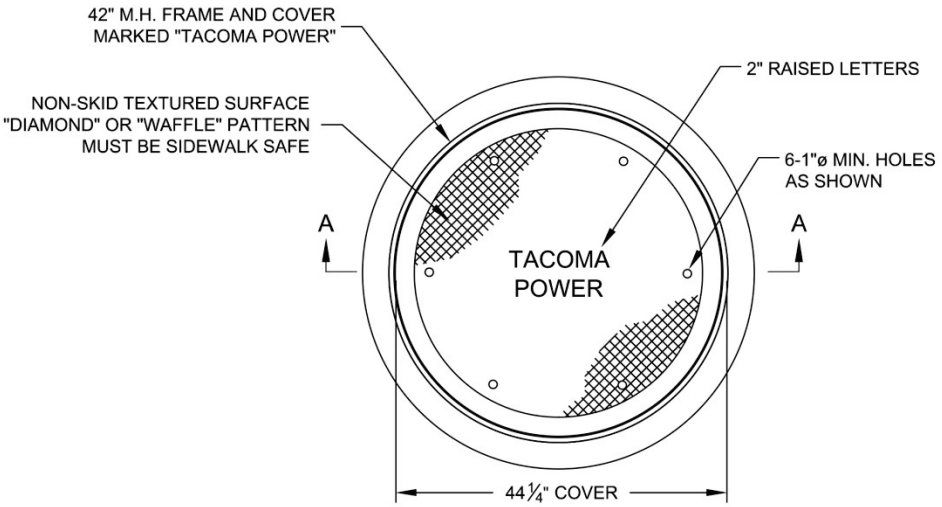

42" M.H. FRAME W/COVER STD H20 LOADING

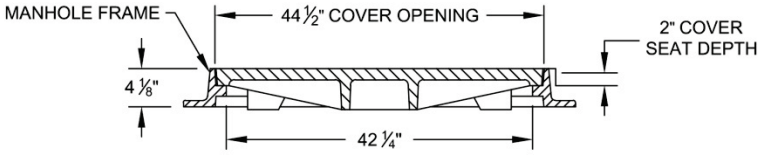

SECTION A-A

DESCRIPTION: Frame and cover, manhole, 42in, rated for H20 traffic loading, to meet AASHTO Designation M306-10, cover is 44-1/4in diameter, ductile iron, to have six (6) 1in dia. lifting holes, lettered “TACOMA POWER” in 2in raised letters, frame is gray iron, all such castings are to be the EJ 1843/1845 series or approved equal

Material	MID#
Manhole Frame and Cover, 42in, H20 Loading (650 lbs)	67978
Manhole Cover only, 42in, H20 Loading (450 lbs)	67979
Riser, 4in * (340 lbs)	68010

* also available in 6in and 12in from vendor

APPLICATION: Manhole access cover for 814, 818, and 10’ x 20’ vaults in traffic locations.

Vault Accessories

Item	Description	MID#
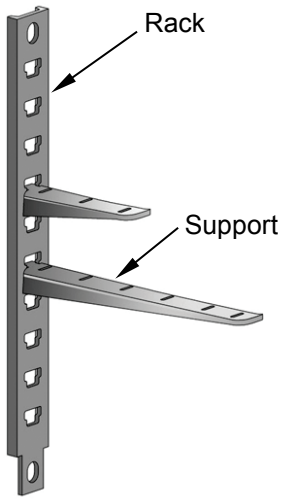	Cable ***racks*** and ***supports*** are used for supporting cable runs in vaults.	<u>Rack</u> 24” – 52143 55” – 52144 <u>Support</u> 7” – 52145 14” – 52146 18” – 52147
	Spring nut (exempt)	34872

FOR MAINTENANCE ONLY

E3 Vault

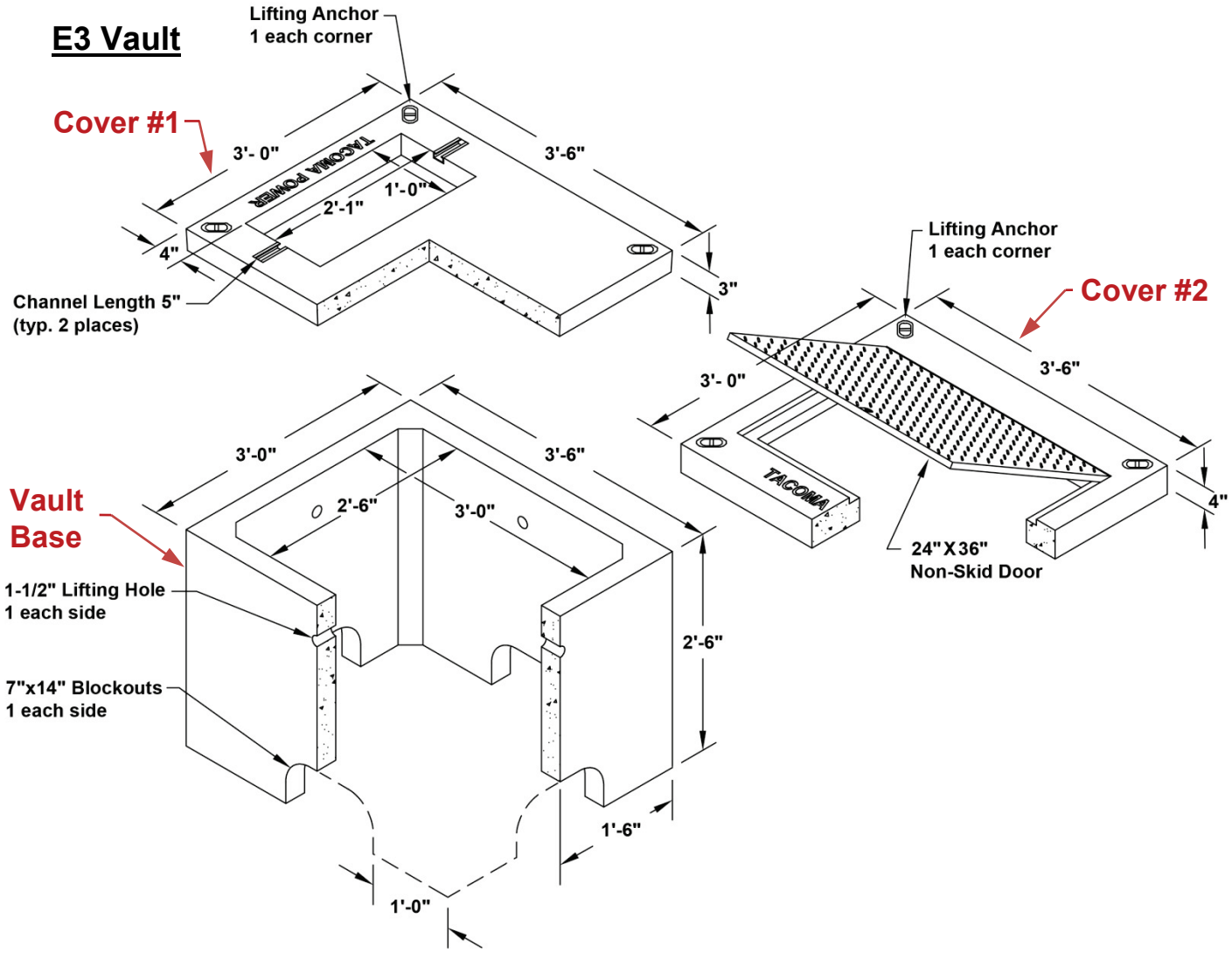

DESCRIPTION: Vault, concrete, E-3, 3ft x 3ft-6in x 2ft-6in base, open bottom, 7in x 14in blockout openings centered on each 3ft end, 7in x 14in blockout openings on each 3ft-6in side offset 1ft from end of base, transformer cover #1 is 3ft x 3ft-6in x 3in cover with 1ft x 2ft-1in blockout opening centered 4in from end, junction box cover #2 is 3ft x 3ft-6in x 4in cover with 2ft x 3ft hinged aluminum door

Material	MID#
E3 Vault Base (1,200 lbs)	43824
E3 Vault Transformer Cover #1 (700 lbs)	43825
E3 Vault Junction Box Cover #2 Non-skid (800 lbs)	67985

APPLICATION: For maintenance only, use for 1Ø padmount transformer or 1Ø junction box in areas with existing underground cable/conduit. Can be used as a secondary service box (SSB). Vault is not self-grounding, must bond to existing grounding or install separate grounding electrode. E3 vaults and covers are rated for pedestrian loads only; not rated for off-street/incidental (unintentional) traffic.

FOR MAINTENANCE ONLY

Split Riser

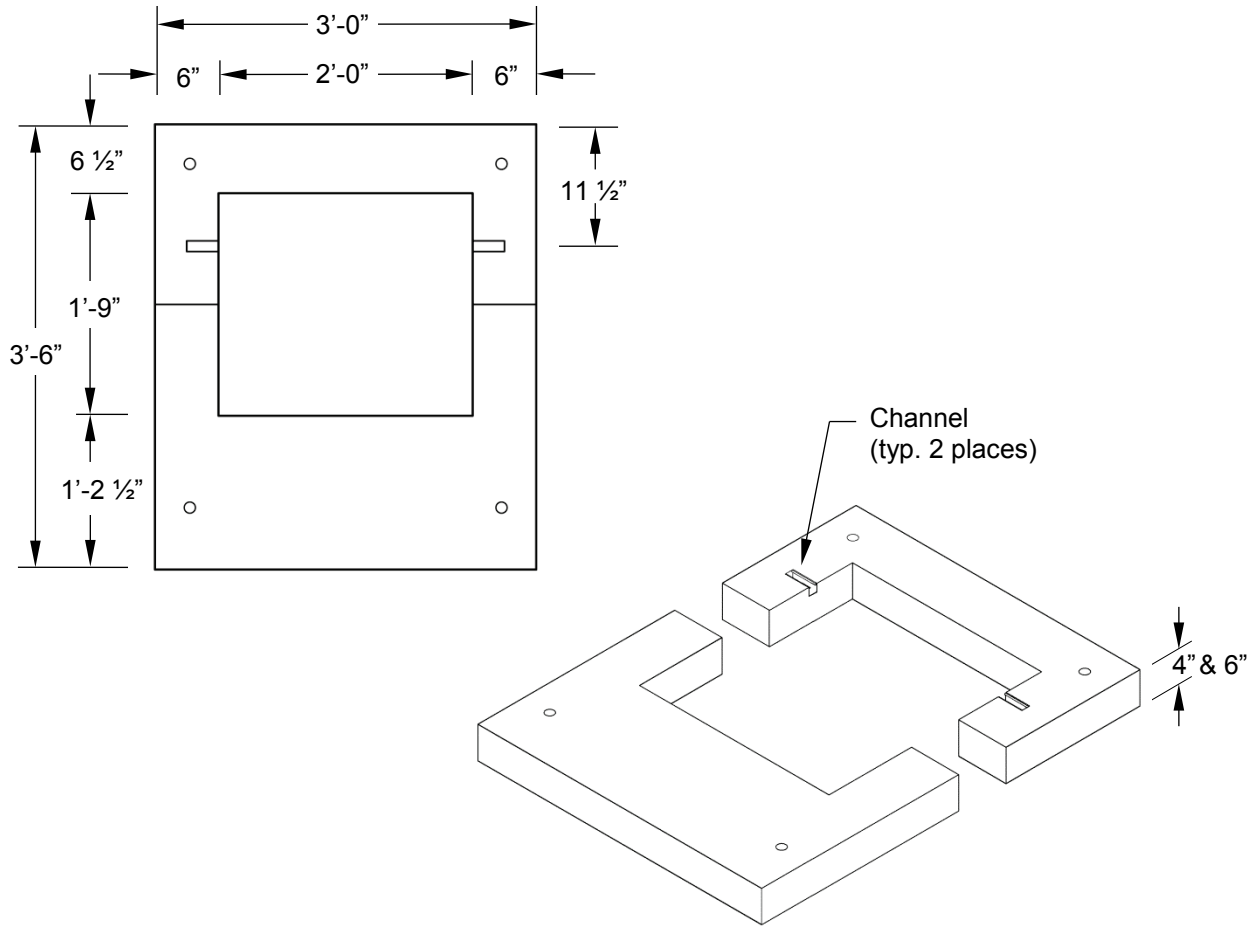

DESCRIPTION: Riser, Concrete, two (2) piece split, 3ft x 3ft-6in, with 2ft x 1ft-9in blockout opening when fit together

Material	MID#
Two Piece Riser, 4in, Two-Piece* (400 lbs)	60729
Two Piece Riser, 6in, Two-Piece (500 lbs)	50896

* Special order only

APPLICATION: For maintenance only, used to provide concrete pad for existing 1Ø padmount transformers, where the original pad has failed or is too low, without having to disconnect the UG primary and secondary cables.

TACOMA POWER
TACOMA PUBLIC UTILITIES

Conduit Applications

A-UG-1400

Scope

This standard provides the size and type of conduit to be used with different underground cables. Conduit sizes are usually determined by two factors, percentage of fill and jam ratio.

Conduit Specifications

Type	Nominal Size	MID#	ID Average (inches)	OD Average (inches)	Weight (per 100')
SCH 40	1¼"	19336	1.36	1.66	46 lbs
SCH 40	2"	19338	2.04	2.38	73 lbs
SCH 40	2½"	19340	2.44	2.88	120 lbs
SCH 40	4"	19343	3.99	4.50	230 lbs
SCH 40	5"	19344	5.01	5.56	320 lbs
SCH 40	6"	41890	6.07	6.63	366 lbs
SCH 80	2½"	19341	2.28	2.88	150 lbs
SCH 80	4"	19354	3.77	4.50	290 lbs
SCH 80	5"	19345	4.76	5.56	400 lbs
SCH 80	6"	41891	5.76	6.63	550 lbs

Conduit Selection

Percentage of Fill

The percentage of fill concerns the cross-sectional area of a particular conduit and the cable(s) in that conduit. It mainly concerns heat dissipation. As a reference, NEC limits fill to 40%. The formula is:

$$\% \text{ Fill} = \frac{nd^2}{D^2} \times 100$$

Where D = inside diameter of conduit
d = outside diameter of cable(s)
n = number of cables

Figure 1

Jam Configuration

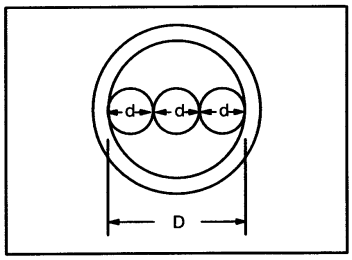

Conduit Selection (continued)

Jam Ratio

The jam ratio represents the probability that ***three*** single cables could align inside the conduit and become jammed (see Figure 1). Jam ratio becomes critical when bends exist in the conduit run. The formula is:

Jam Ratio = $\frac{1.05D}{d}$ using the same symbols as % Fill

If the jam ratio is …	Then …
Larger than 3.0	Jamming is improbable
Between 2.8 and 3.0	Serious jamming is possible
Between 2.5 and 2.8	Jamming is improbable
Less than 2.5	Jamming is impossible

Conduit Application

			1Φ Cable(s)			3Φ Cables		
	Voltage	Size [1]	Conduit	% Fill	Jam Ratio	Conduit	% Fill	Jam Ratio
Standard Sizes	Primary	#2 Cu	2½”	20	-	4”	22	3.9
	Primary	#1/0 Cu	2½”	25	-	4”	27	3.5
	Primary	350 Cu [2]	-	-	-	5”	24 [2]	3.8 [4]
	Primary	750 Cu [2]				6”	23 [2]	3.8 [4]
	Secondary	#4/0 Al Tpx	2½”	20	3.9	-	-	-
	Secondary	250 Al Tpx	2½”	25	3.4	-	-	-
	Secondary	350 Al Tpx	4”	12	4.9	-	-	-
	Secondary	#4/0 Al Qpx	-	-	-	2½”	27	3.9
	Secondary	350 Al Qpx	-	-	-	4”	16	4.9
	Secondary	500 Cu Qpx [3]	-	-	-	4”	18	4.3
Historic data for network system [5]	Primary	#2 Cu				2½”	59	2.4
	Primary	350 Cu [2]	-	-	-	4”	38 [2]	3.0 [4]
	Secondary	#2 Cu Qpx	-	-	-	2½”	11	6.4
	Secondary	250 Cu Qpx	-	-	-	4”	13	5.6
	Secondary	350 Cu Qpx	-	-	-	4”	16	4.9

[1] Tpx = triplex (3 wires), Qpx = quadruplex (4 wires)

[2] includes #4/0 bare Cu neutral (522 mils)

[3] neutral is also 500 kcmil copper

[4] #4/0 neutral disregarded in calculation

[5] not a current construction standard, historic data for network system

note: all calculations based on Schedule 40 conduit:

Conduit Bends

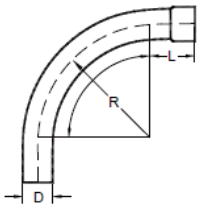

The standard conduit bends are listed below:

Trade Size		MID #'s for SCH 40 Bends			
		2.5"	4"	5"	6"
11˚ Bend	48" Radius				42014
22˚ Bend	18" Radius	19651			
	24" Radius		19654		
	36" Radius			19660	
	48" Radius				42015
45˚ Bend	18" Radius	19650			
	24" Radius		19655		
	36" Radius			19657	
	48" Radius				42016
90˚ Bend	18" Radius	19653			
	24" Radius				
	36" Radius	19661	19662	19658	
	48" Radius		19663	19659	42017
	60" Radius				42018

Sidewall Pressure

Sidewall pressure can be reduced by increasing the conduit bend radius.

Sidewall Pressure = 500 lbs maximum for one cable,
1,000 lbs for three cables

$= \frac{T}{R}$ where ***T*** is tension (lbs) out of the bend
and ***R*** is bend radius in feet.

All bends shall be made to comply with ANSI Standard C80.1-83 and/or ASTM Standards F512, as appropriate.

NOTE:

- Rigid galvanized steel bends may be required when pull length or tension is large
- Saddle blocks may be required on some bends depending on soils and pulling tensions

Split Conduit & Couplings

Split conduits snap together for repairing conduit systems.

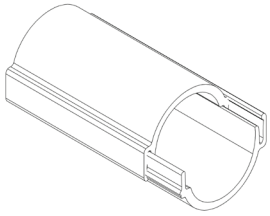

Split Conduit

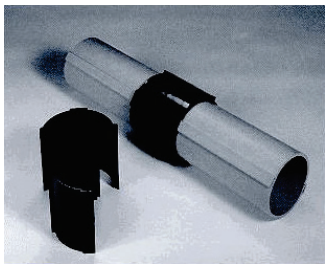

Split Couplings

Size	MID#		
	Split Conduit (10' lengths)	Conduit Coupling Split to Split	Conduit Coupling Split to PVC
2"	19357	37662	19393
2-1/2"	19358	37663	19394
4"	19359	37664	19395
5"	37660	37665	37661
6"	52201	52200	52059

Bell Ends

Conduit runs will normally terminate into a bell end to prevent cable damage.

Conduit Size	MID #
2"	18986
2-1/2"	18987
4"	18988
5"	18989
6"	41993

References

- ANSI Standard C80.1-83
- ASTM Standards F512
- Okonite Installation Practices for Cable Raceway Systems, 2000 Edition
- Cablec Cable Installation Manual, Sixth Edition

TACOMA POWER
TACOMA PUBLIC UTILITIES

Customer Requirements
Thermal Backfill for Underground Power Cable Installations

C-UG-2050

Application

Flowable Thermal Backfill (FTB) is placed around power cable conduit runs to more effectively ***dissipate heat generated by the cables*** into the surrounding environment. FTB is a uniform and efficient heat conducting medium that also provides 100% compaction, structural support, and mechanical protection for the conduit systems.

Why use FTB?

- Multiple cables in conduit installed in the same trench will experience mutual heating and run hotter.
- Multiple conduits in a common trench add air insulation which holds in heat.
- Communication duct banks parallel to the power trench insulate heat and cause the power cables to run hotter.
- Other heat sources that are either parallel or cross the power trench will reduce heat dissipation and cause the power cables to run hotter and/or create hot spots.
- All of the above conditions may require de-rating of the current carrying capacity of the power cables unless the heat can be dissipated.
- Using FTB around the power ducts helps disperse the heat from the trench line to the surrounding air.

When to Install FTB

Use FTB when a power trench has any of the following:

- 3 or more feeder conduits (include spare feeder conduits in the count).
- 4 or more feeder <u>and</u> distribution conduits combined.
- When a communication duct line is within 12 inches and parallels the feeder trench line (for trenches containing 2 or more feeders).
- When the power conduits are within 2 feet of a secondary heat source, such as a steam line or another underground feeder crossing. FTB use is needed only in conflict areas.

Performance vs. Cost

Industry consultants report a common ***5% to 10%*** increase in cable ampacity with the use of thermal backfills. See standard E-GR-1500, “Data for Underground Primary Cables” for cable ampacities.

Similar to Controlled Density Fill (CDF) backfill, FTB does not need to be compacted, hardens quickly so that backfill can be completed the following day, and readily fills into all trench cavities without vibration.

Expect an approximate ***10 %*** increase in cost for FTB over CDF backfill.

FTB Selection

The approved FTB local mix designs are available for the following ***compressive strength*** ratings:

Supplier	Non-Traffic Mix (300 psi FTB)	Traffic Mix (1000 psi FTB)
Corliss	J5201FTB	J5201FTSB
Glacier	0307	3253

Other suppliers may be available if approved by the Tacoma Power Engineer. See the following "FTB Components" section for more information on FTB components.

FTB Components

Components

The proportions of all FTB components are balanced such that when the specified amount of water is added a uniform mix will be obtained that will not segregate when installed by pouring. **No substitution of materials is permitted**.

Component	Description
Cement	Normal Portland cement conforming to ASTM Designation C150. The quality of the cement determines the compressive strength.
Fluidizer	Class "C" or "F" fly ash. The amount of fly ash influences the flow.
Fine Aggregate	Concrete sand with a particle size distribution meeting ASTM C33 limits for fine aggregates. This governs thermal properties.
Medium Aggregate	The maximum aggregate gravel size shall be 3/8" minus. This also governs thermal properties.

Additives

No other additives shall be added. Any deviations may lead to problems with flow and water demand which in turn would affect soil thermal resistivity and strength.

Under no circumstances shall air entrainment additives be added. The only remedy available to the Contractor if an air entrainment additive is included in the mix is to physically remove all of the FTB from the cable trench and start over.

Installation

Water

It is recommended to add slightly less than the required amount of water at the batching plant. Should there be a need to add more water to achieve a good homogeneous flow; this can always be done at the job site prior to the pour.

Batching

Batching shall be done at a central plant and the blended FTB supplied by ready mix concrete trucks (ASTM C94). The FTB shall be supplied and transported in such a way as to minimize segregation and facilitate installation.

Installation *(continued)*

Pouring

The ends of the trench shall be secured by bulkhead or earth fill.

The FTB is to be installed by pouring into the trench and completely filling all the voids without causing excessive segregation. ***No vibration or compaction is allowed***.

At the discretion of the Contractor, the flow may be adjusted slightly by changing the amount of water slightly (as long as no segregation occurs, and the FTB fills all the voids completely when poured).

Pumping

For pumping applications the flow may have to be modified. Changes to the mixture to facilitate pumping shall be submitted to Tacoma Power 30 days prior to installation.

Bleed Water

The FTB is in a slurry form so it can flow and fill all voids. The slurry phase will quickly consolidate, resulting in excess bleed water. The Contractor shall make provisions to allow this bleed water to be contained, drained, or be pumped away in an environmentally acceptable manner.

Temperature Restrictions

FTB shall not be placed on frozen ground. At the time of placement, FTB must have a minimum temperature of 40˚F. Mixing and placing shall stop when air temperature is 38˚F or less and falling.

Conduit Buoyancy

Conduits to be encased in FTB shall be installed with spacers and hold downs (see C-UG-1100) to be adequately anchored so that they do not float during FTB placement. Tie-Downs and/or FTB piles should all be installed at regular intervals depending on quantity and size of conduits, i.e., the overall buoyancy of the duct bank. Other methods may be used if approved by the Tacoma Power Engineer.

Quality Control

With thermal backfills, the quality is in the mix. If it is properly formulated and blended, then the installation and final product performance will meet the specifications. Information for various tests and reports may be required ***should the Tacoma Power Engineer deem them necessary***.

Thermal Resistivity Test & Values

The FTB should have a thermal resistivity Rho (ρ) of less than 40°C-cm/Watt when moist and less than 100°C-cm/Watt when in place and totally dry. If testing should be required, samples shall be sent to Geotherm, Inc., or an alternate testing laboratory approved by the Tacoma Power Engineer.

Some typical values for RHO (ρ) that are commonly used:

Backfill Material	Thermal Rho (ρ) °C-cm/Watt
Moist native soil	90
Concrete	55
FTB	40

Other Factors

Other factors can change the soil thermal resistivity:

- ***Moisture*** is critical to soil thermal resistivity. Sand, for example, dries out easily resulting in high Rho values.
- ***Burial depth*** also has a small impact on cable ampacity. Tests have shown reducing depth from 36" to 30" (to top of enclosure) will increase ampacity by 1-3%.
- Soil thermal resistivity decreases with ***compaction***.

Sources

Standard	Title
ASTM C31	Standard Practice for Making and Curing Concrete Test Specimens in the Field
ASTM C33	Standard Specification for Concrete Aggregates
ASTM C94	Standard Specification for Ready-Mixed Concrete
ASTM C172	Standard Practice for Sampling Freshly Mixed Concrete
IEEE 442	IEEE Guide For Soil Thermal Resistivity Measurements

Thermal Resistivity Consultant	Geotherm Inc. 561 E Elliot Road # 155 Chandler, AZ 85225-1119 480-892-9723 www.geotherm.net Flowable Thermal Backfill (FTB™) is a Geotherm Trade Mark

TACOMA POWER
TACOMA PUBLIC UTILITIES

Customer Requirements
Conduit Installations, High Voltage

C-UG-1100

Application

Requirements for high voltage underground conduit systems, installed by customer or contractor, which will be owned and maintained by Tacoma Power. High voltage underground conduit installations shall be governed by this standard and any supplemental Tacoma Power specifications.

In This Standard

General

- All cable/underground conductor shall be installed within conduit per this standard. Cable/underground conductor shall not be direct buried.
- All materials and equipment required for the construction of the conduit system shall be furnished by the customer/contractor, unless specifically stated otherwise in the special conditions of the Letter of Agreement or Tacoma Power Construction Contract Specification.
- According to the Tacoma Power Customer Service Policies, all conduit will revert to Tacoma Power's ownership after construction has been completed, inspected, and approved by the Tacoma Power Construction Inspector.
- Permanent structures are never to be constructed or moved on top of buried Tacoma Power conduit or cable.

Inspection

- The customer/contractor shall contact the appropriate Tacoma Power Inspector at least 24 hours in advance of beginning construction.
- Construction work performed without prior notice to the Inspector will be subject to rejection.
- Materials or workmanship failing to meet the requirements of this standard will be rejected. Damaged or unacceptable materials shall not be used in the work.
- Materials delivered to the job site shall be subject to inspection by the Inspector.
- If required by the Tacoma Power Inspector, the customer/contractor must remove the rejected material and furnish and install, at customer/contractor expense, approved material and/or workmanship.
- No work shall be embedded in concrete, backfilled, or covered or concealed until it has been inspected and approved by the Tacoma Power Inspector.

Separation from Other Utilities and Structures

- Separation from Tacoma Power conduits and other utilities is detailed in NESC 320.B, “Separation From Other Underground Installations”.
- Typical separation is a minimum of ***12 inches of earth***, but lesser distances may be used where the parties agree.
- Conduit shall be installed a minimum of 3 feet from any structure.

Type of Conduit

The type of conduit for each application shall be determined by the Tacoma Power Engineer. The standard acceptable type of conduit is shown below:

Conduit Type	Requirements
PVC	• Sch. 40 or Sch. 80 • Must conform to UL 651 and NEMA TC-2 • Color: Gray

Conduit Applications

Conduits and encasement provide various ***levels of protection*** for cables. This table lists the different levels and typical applications. The Tacoma Power Engineer will specify which level(s) will be required.

Installation	Typical Application
Sch. 40 PVC	Standard for installation in a trench and Horizontal Directional Drilling (HDD) (See "Horizontal Directional Drilling" on page 9).
Sch. 80 PVC	For areas where minimum cover is not possible and/or for heavy duty applications.
Sch. 40 PVC Encased in CDF or FTB	Controlled Density Fill (CDF) encasement provides some added protection, and is used: • For instant compaction when installation time is a factor. • Local permitting jurisdiction, or third party, requires it. • Under foundations as required. Flowable thermal backfill (FTB) offers an increase in cable ampacity; see standard C-UG-2050 "Customer Requirements, Thermal Backfill for UG Power Cable Installations".
Sch. 40 PVC Encased in Concrete	Rarely used any more, only special conditions such as: • Where a geotechnical analysis requires it, for example very heavy traffic in poor soils. • Local permitting jurisdiction, or third party, requires it.
Warning Ribbon	Warning ribbon is installed 6" to 12" below final grade in those locations where minimum cover is not possible.
Red Dye Encasement	If local permitting jurisdiction, or third party, requires it.

Conduit Components

Elbows

- All elbows shall be made to comply with ANSI Standard C80.1-83 and/or ASTM Standards F512, as appropriate.
- Elbow saddle blocks may be required on some bends depending on soils and pulling tensions.
- The minimum radius of elbow used in all conduit installations, unless otherwise specified by the Tacoma Power Engineer, shall be:

Conduit Trade Size	2.5"	4"	5"	6"
Minimum Radius	36"	36"	48"	48"

Conduit Components *(continued)*

Pole Riser Transitions The most common examples of conduit type transitions are at pole risers.

Sch. 40 PVC to Sch. 80 PVC	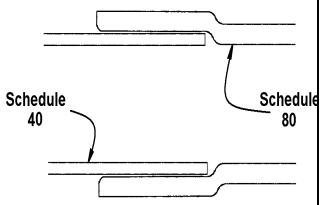 Preferred transition with Sch. 80 bell end.	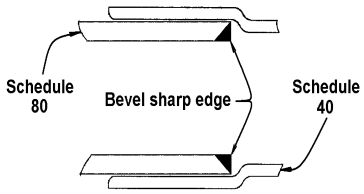 Alternate transition with Sch. 40 bell end, the sharp edge on the Sch. 80 end must be beveled or filed down.
Couplings	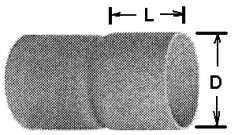	Deep socket couplings are required, where ***the socket depth (L) equals the conduit diameter (D)***.

Trenches for Conduit

Figure A Typical Trench

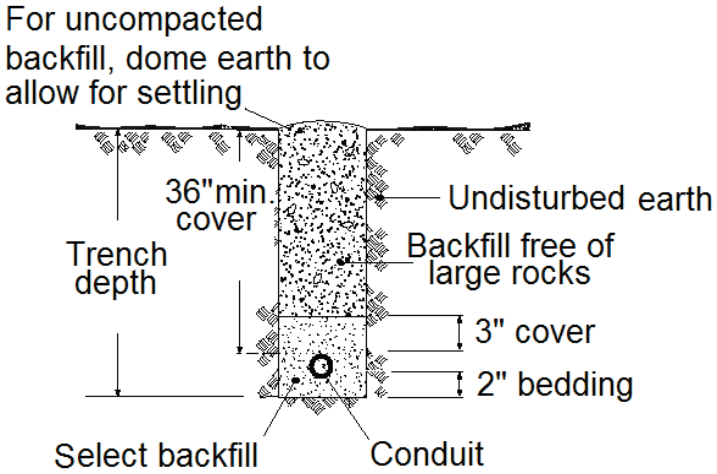

Trenches for Conduit *(continued)*

General

- The trench shall be straight from point to point.
- The bottom of all trenches shall be flat, smooth, uniform, and free of any and all rocks exceeding ***2 inches***, obstructions, sharp objects, buried timbers and pilings, and other debris encountered.
- Water in the trench shall be removed by pumping or draining as necessary.

Cover over Conduit

- The minimum cover over conduit shall be ***36 inches***, or the requirement of the local permitting jurisdiction, whichever is greater.
- Total cover is measured vertically from the final grade to the top of the conduit.
- At Tacoma Power Engineer's direction, the burial depth may be more or less than the standard 36 inch depth in order to accommodate installation.
- The customer/contractor is responsible for determining finished grades to assure that minimum burial depth requirements are met ***after*** conduit installation.

Sloping & Shoring

Trenches shall be prepared according to WAC 296-155 Part N, “Excavation, Trenching, and Shoring”.

Bedding and Cover

Select backfill includes the 2 inches of ***bedding*** and 3 inches of ***cover*** as shown in Figure A.

- No construction debris shall be left in the trench.
- Select backfill material shall be free of rocks exceeding ***2 inches***, obstructions, sharp objects that could cut the conduit, or any materials that will create pressure points that would crush the conduits during or after the bedding and backfill process.
- If the excavated material is found to be unsuitable for select backfill as determined by the Tacoma Power Inspector, the unsuitable material shall be hauled away and disposed of, and sand or Class B bank run gravel with 100% passing 2 inch screen shall be brought in.
- The select backfill shall be compacted evenly on both sides of the conduit to fill all voids, and shall be placed to prevent damage to the conduit.
- For un-compacted backfill, dome the top of the trench to allow for settlement.

Compaction

- Where compaction is required, backfill shall be mechanically tamped to 95% compaction in 6 inch lifts, or to the requirements of the local permitting jurisdiction whichever is greater.

Caution!

- Backhoe compactors (hoe-pacs) can generate tremendous forces, and should be used only for final compaction. ***Do not use within 30 inches of conduits*** to avoid damage.

Restoration and Cleanup

It shall be customer/contractor responsibility to restore all areas disturbed by construction back to a condition equal to or better than that which existed before construction.

Trenches for Conduit *(continued)*

Trenching Near Trees

What to do
Where trenching work will be conducted near trees, the trees should be removed. If this is not possible, follow these practices:

Small Species Trees (as determined by Tacoma Power Arborist) and/or for mature trees measuring *less than 20 inches* in diameter at 4.5 feet above grade.

- When space allows, trenching will be routed outside the drip line of existing tree(s).
- When tree roots 2 inches in diameter, or larger, are accidentally or unavoidably cut, they will be sawed flush on the tree side of the trench.
- Whenever possible, soil from a trench will be piled on the side of the trench farthest from the tree(s).

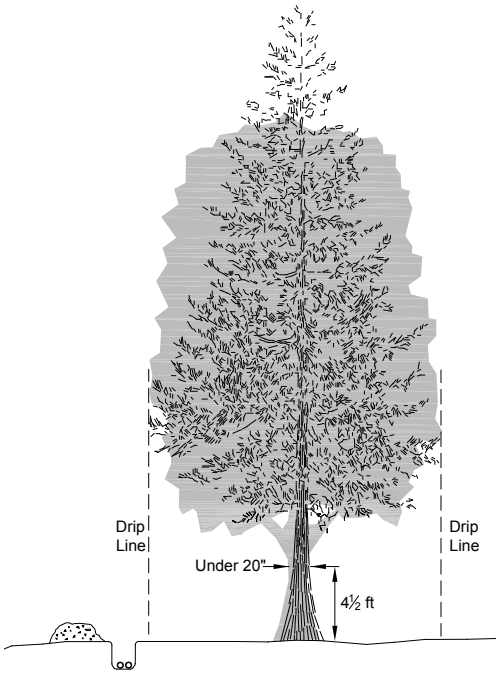

- Trenches will be back filled in a timely manner and compacted to no more than their original firmness when possible.
- Backfill will be kept clean of trash, chemicals or any other waste or debris.

Trenches for Conduit *(continued)*

Trenching Near Trees *(continued)*

Large Species Trees (as determined by Tacoma Power Arborist) and/or for mature trees measuring *20 inches* or greater in diameter at 4.5 feet above grade.

- Tunneling under the tree roots at a depth of at least ***36 inches*** below grade is the preferred method when possible.
- If tunneling is not possible, maintain a minimum distance of ***15 feet*** from the trunk of the tree to the trench.

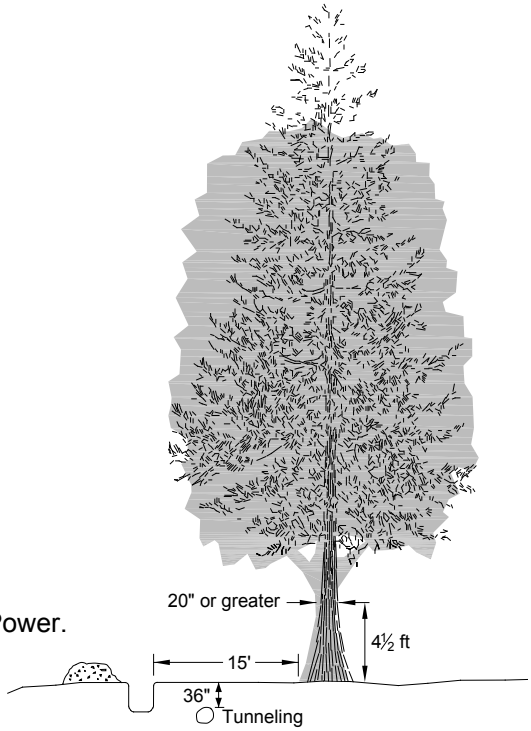

For more information
Contact a ***Certified Arborist*** at Tacoma Power.

Conduit Encased in Concrete, CDF or FTB

Installed

- The conduits shall have a maximum cover of 3 inches in every direction. Anything higher becomes an underground wall for water or other utilities. There may be exceptions where underground obstructions require a higher limit.
- Where conduit transitions above-grade, the elbow shall be Sch. 80 PVC (or Steel if required by the local permitting jurisdiction).

Spacers and Hold Downs

- Conduit spacers shall be used in ***all encased conduit applications***.
- Conduits and spacer assemblies are to be firmly secured and tied down. Hold down methods shall be used to control floating of conduits during the encasement process.
- The backfill material installed in trenches containing conduit spacers shall not contain rocks that exceed the edge-to-edge separation distance between conduits.
- The minimum space between conduits shall be ***2 inches***.
- Concrete is to be hand-worked to completely fill all voids between conduits and earth or forms.

Conduit Encased in Concrete, CDF or FTB *(continued)*

Concrete Specification

Concrete for conduit encasement shall be Class "B" (3,000 psi at 28 days- 5 ¾ sack), as specified in Section 6-02.3(2) of the latest revision to the State of Washington Standard Specifications for Road, Bridge, and Municipal Construction. Surfaces upon which concrete is to be placed shall be free of standing water, mud, and debris. Absorptive surfaces against concrete to be placed shall be moistened.

Cold Joint Construction

When it is necessary to make cold joints in the concrete encasement, they shall be made on a uniformly sloping plane at the angle of repose of the fresh concrete and shall be roughened. Before beginning the next pour, the surface of previously placed concrete shall be thoroughly cleaned.

Concrete Reinforcing

- Systems of ***up to 6 conduits*** shall be reinforced with a minimum of two No. 4 reinforcing bars placed in the bottom of the conduit line.
- All reinforcing bars shall have a minimum concrete cover of 3 inches on the bottom and 2 inches on the sides.
- Special conditions such as extremely heavy wheel loads in soft soils, or conduit lines composed of **more than 6 conduits**, will necessitate special reinforcing requirements detailed by the Tacoma Power Engineer.
- Reinforcing steel shall be in accordance with the latest revision to the State of Washington Standard Specifications for Road, Bridge, and Municipal Construction, except that reinforcing steel shall conform to the requirements of ASTM Designation A-615, Billet Steel Bars for Concrete Reinforcement, including supplementary requirements 51, Grade 40.

Controlled Density Fill (CDF) Specification

- CDF mix shall consist of Portland cement, water, fine aggregate and, if required by the engineer, accelerating admixtures. The proportions of the CDF shall conform to a mix design that shall be submitted with test results to the engineer for approval.
- CDF shall have a 28 day unconfined compressive strength from a minimum of 50 psi to a maximum of 150 psi and have a consistency that will result in a flowable product at the time of placement which does not require manual means to move it into place. CDF shall have a slump, as tested by ASTM C 33, of not more than 10 inches.
- Fine aggregate shall be sand meeting the requirements of the State of Washington Standard Specifications for Road and Bridge Construction, "Fine Aggregate for Portland Cement Concrete", 9.03.1(2).

Flowable Thermal Backfill (FTB) Specification

For FTB requirements, see standard C-UG-2050 "Customer Requirements, Thermal Backfill for UG Power Cable Installations".

Conduit Installation

General

- All conduits shall be installed in accordance with the manufacturer's recommendations. This includes adequate glue and seating ends into couplings or bell ends to their full depth.
- Curves in an otherwise straight conduit run must be approved by Tacoma Power.
- Conduits shall be placed so that they are on firm bearing for the length of the installation and shall be laid on as uniform a slope as possible.
- Provide adequate support on each side of conduit when conduit crosses over another utility, to prevent load transference onto other utilities.

Into Vaults

All conduits entering a vault shall follow the requirements of the following standards:

Vault Type	See Customer Requirements Standard…
Junction Box	C-UG-1500, Primary Junction Box Installation
Transformer Vault	C-UG-1700, Transformer Vault Installation
Precast Concrete SSB	C-SV-3200, Commercial Secondary Service

Horizontal Directional Drilling (HDD)

Tacoma Power requires Sch. 40 PVC, locking joint type conduit systems for HDD applications. HDPE conduit is not allowed.

The following are approved manufacturers for HDD conduit:

- Certa-Com by North American Pipe Corporation
- Can-Loc by Cantex
- Bore-Gard by Prime Conduit

Prove the Conduit

- After conduit installation is complete and final grade is established, the customer/contractor will be required to prove conduit integrity using a Tacoma Power approved mandrel and with the Tacoma Power Inspector present.
- After swabbing the conduits clean and proving that the conduits are free from debris and obstructions, the customer/contractor shall leave a silicone-coated nylon pull tape, or Tacoma Power approved equivalent, marked in feet and secured at both ends of each conduit.

References

- National Electric Safety Code (NESC), Section 32, Underground Conduit Systems
- “Trenching and Tunneling Near Trees: A Field Guide for Qualified Utility Workers” by Dr. James R. Fazio

Customer Requirements
Residential
Joint Utility Trench

Application

This standard describes the excavation and backfill requirements for joint utility trench for residential developments.

In This Standard

Purpose

The purpose of this standard is to show the excavation requirements of multiple utilities installed within a common trench. The arrangements have been approved by the coordinating utilities within Pierce County.

It is intended that this standard be used in conjunction with standard C-UG-1100 “Customer Requirements, Conduit Installations” when the customer/developer will be installing the electrical conduit and enclosure system for Tacoma Power.

Design Requirements

The following process is intended to ensure a coordinated installation of the following utilities within a common trench:

- Power
- Click!
- Telephone
- CATV
- Natural Gas

Water, sewer, and roof drains are installed within separate trenches outside of the joint utility easement.

System Design

Detailed engineering drawings of the project shall be submitted to the utilities involved 2 to 3 months prior to installation. Please provide these drawings in the AutoCad 12 or later format with separate layers identified for Tacoma Power.

The information required on the drawings are:

Utilities, with Stub-out Locations	Road and Land Features
• Water	• Curb
• Sanitary Sewer	• Road with centerline
• Storm Drain	• Slope
• Storm Water Retention	• Property & right-of-way lines
• Roof Drain	• Survey monuments
	• Easements

Easements

A ***minimum*** 10 foot unobstructed easement is required parallel to, and on both sides of, the road right-of-way.

The maximum slope from back to front shall be 2%.

The easement shall be clear of all obstructions of construction including:

- Sidewalks
- Drainage systems
- Dry wells
- Fire hydrants
- Storm systems
- Sewer stubs
- Water meters
- Permanent structures
- Street light poles

Trenches 48" or Greater in Depth

Trenches that are 48 inches or greater in depth shall meet the requirements of WAC 296-155, Part N, "Excavation, Trenching, and Shoring". Qualified workers shall determine the required safety mitigation methods as allowed by state law.
Side sloping of the trench is the most common method of mitigation.

Staking Requirements

Coordination Meeting

A meeting will be required between the developer and the joint utility representative to coordinate the setting of survey stakes, marks and location of road crossings.

Stakes

Survey stakes shall include:

- Lot numbers
- Grade adjustment
- Offset distance
- Radius points at intersections involving road crossings

Additional staking may be required as determined during the coordination meeting.

Figure 1 Stake Locations

Before Curbs and Asphalt Base, or Paving	Stakes shall be installed in 20 foot and 30 foot offsets of each lot corner for accurate locating of road crossings. Additional offset stakes may be required by the New Services Engineering Office.
After Curbs and Asphalt Base, or Paving	Lot lines with lot numbers shall be painted on the curb. Also, an arrow shall be painted in the middle of the road that aligns with the property line and the offset stakes. Additional offset stakes may be required by the New Services Engineering Office.

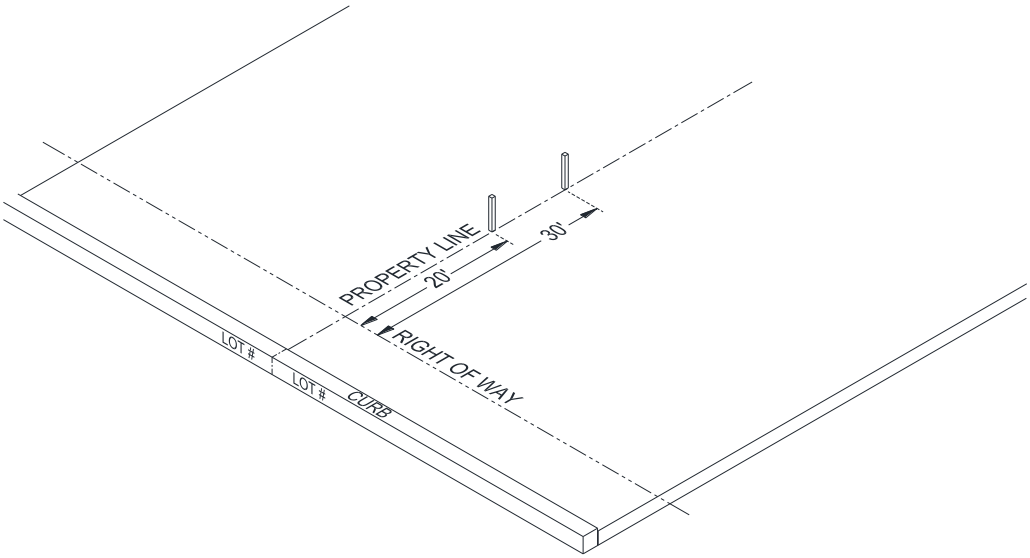

Road Crossings

Road crossings will be identified by the joint utilities. They shall be installed prior to paving and curb as identified in the coordination meeting.

Depth

- Road crossings must be installed with a minimum of ***36 inches of cover***, measured from finished surface grade to top of highest conduit, or in a ***minimum 42 inch deep trench***, whichever is deeper.
- The conduit shall be terminated and capped at a point usually 5 feet from the back of road asphalt as shown in Figure 2.
- Any variations in depth of the crossings must be approved by the participating joint trench utilities.

Conduit

- All conduit shall be gray, schedule 40 PVC in 2-1/2", 4" or 5", installed per joint utility requirements and capped with approved devices.
- Terminate and cap ends of conduit with plastic pipe caps or plugs, ***not tape***.
- Install ***one inch (1") minimum*** spacers or shims between conduits to allow conduit couplers later.

Marking

Both ends of road crossings shall be marked with conduit markers.

Figure 2 Plan View of Typical Utility Road Crossing

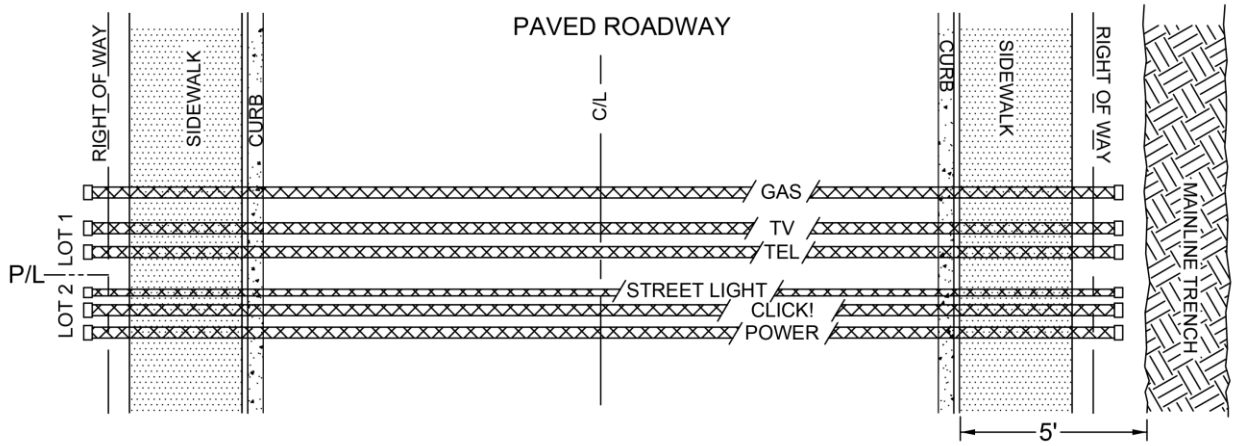

Road Crossings *(continued)*

Figure 3 Typical Cross Section View of Utility Road Crossings

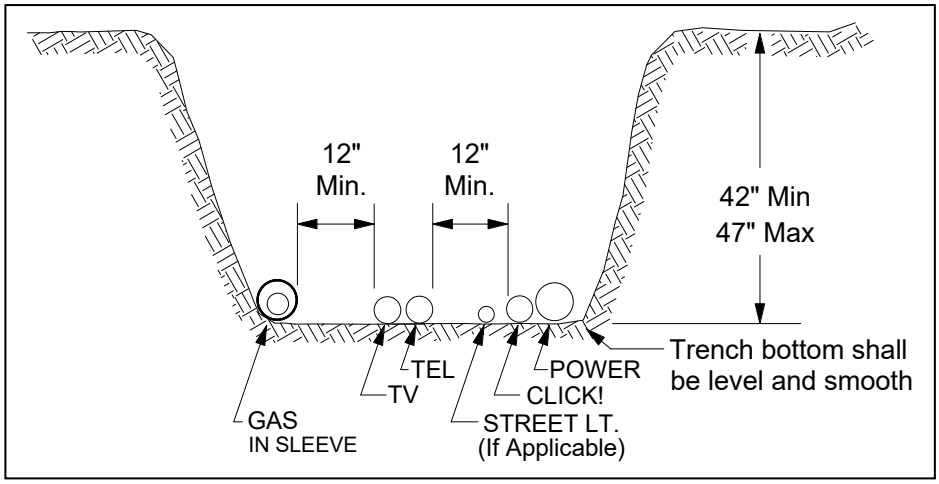

(Looking toward mainline trench)

Joint Trench Requirements

The following shall be followed in the installation of joint utilities:

Coordination

- The joint trench utilities will share facility designs in order to achieve the best common design for the project.
- A meeting will be required between the developer and the joint utility representative to coordinate the route of the trench and locations of transformers, junction boxes, and secondary service boxes.

Fire Hydrants and Water Meters

Fire hydrants and water meters shall maintain a distance from the utility trench as required by the serving water utility and fire department.

Trench Maintenance

Whoever is providing the trenching shall be responsible for the maintenance of the trench during the installation of the joint utilities. This maintenance will include, but is not limited to:

- removal of any water accumulation in the trench.
- trench depth and width per the standard.

Joint Trench Requirements *(continued)*

Prior to Excavation

Trench will be allowed to be opened when the following has occurred:

- All required fees have been paid.
- Any required permits have been obtained.
- All easements have been obtained.
- Curb and asphalt base, or paving, as determined by Joint Utility Group, have been installed.
- Lot lines and lot numbers shall be painted on the curb and center of road.
- Lots graded to within 6 inches of finished grade.
- Sanitary sewer and water stub-outs have been installed when required.

Closing of Trench

Only after all participating utilities have installed and approved their facilities may the trench be backfilled. This may occur in segments at the approval of the joint utilities.

Trench Construction

Joint utility trenches shall be provided as listed below:

Dimensions

The trenches shall be of the ***minimum*** dimensions unless approved by Tacoma Power:

Width at bottom	42” minimum, 48” typical
Depth from grade	42” minimum, 47” maximum
Spoils	No closer than 2 feet from edge of trench

Backfill

- The trench shall be backfilled with native backfill upon approval by the joint utilities. If the native material is determined to be unsuitable, backfill material will need to be imported.
- The backfilling of the trench is to be done with reasonable care so as not to damage the conduit systems and enclosures that were installed.
- Backfill shall also meet the compaction requirements of the applicable permitting agency.

Trench Construction *(continued)*

Sanding

- As required by the natural gas utility, sanding will be needed in the trench to bed the natural gas line.
- In rocky conditions other joint utility trench partners may require sanding of the trench prior to conduit installation.

Figure 4 Typical Trench Cross Section of Mainline Trench

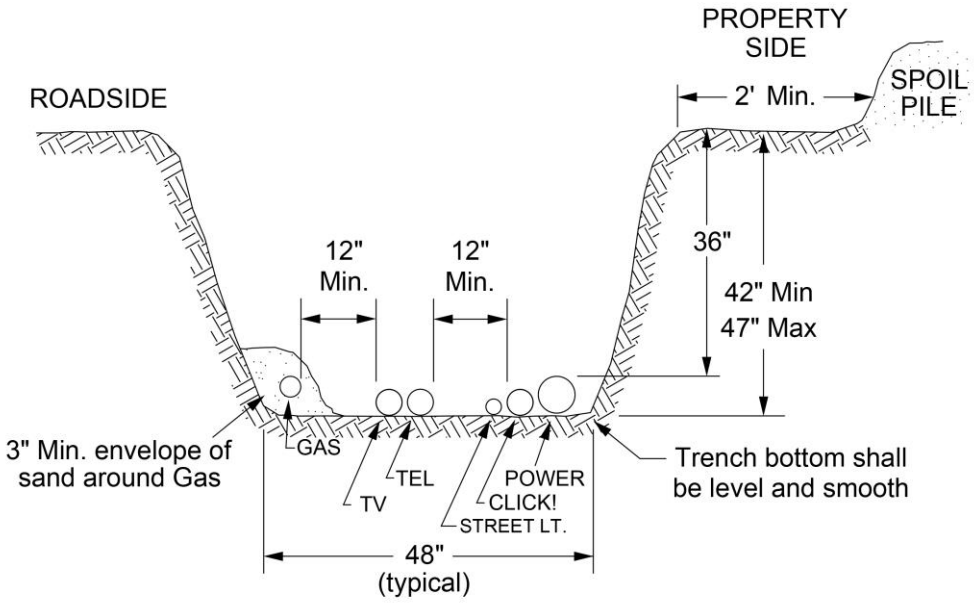

Trench Construction *(continued)*

Figure 5 Services Layout

Tacoma Power Secondary Service Box (SSB)

- ***All conduits*** must be grouped at the ***same end*** of the SSB.
- Terminate conduit ends two inches (2”) above bottom of SSB.
- The top of the SSB cover shall be two inches (2”) above final grade.

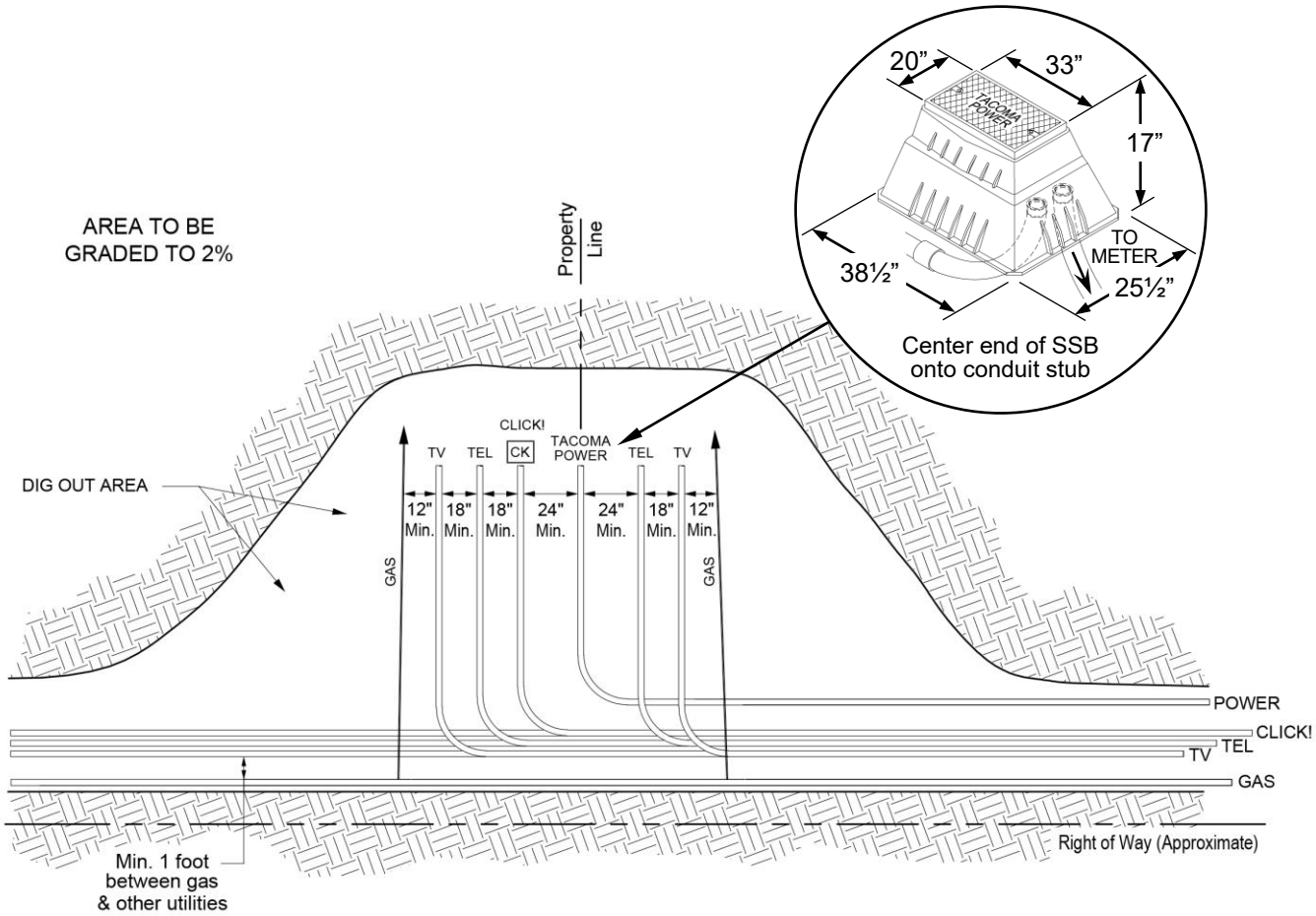

This configuration keeps all the utilities in the same planned relationship, minimizes congestion, and digging up the wrong utility.

Trench Construction *(continued)*

Figure 6 Transformer Layout (Plan View)

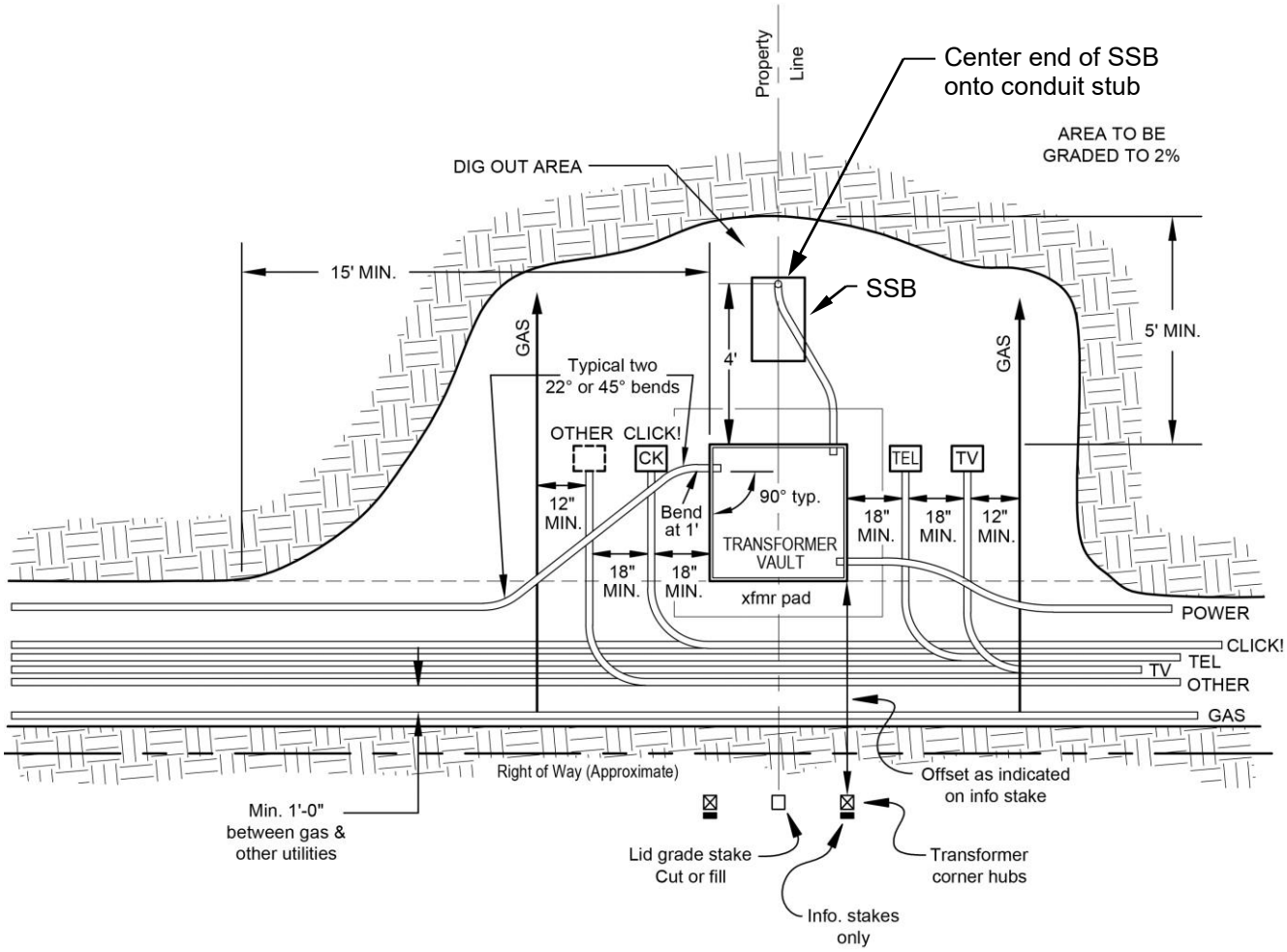

Trench Construction *(continued)*

Figure 7 Transformer/J-Box Vault Layout (Cross Section View)

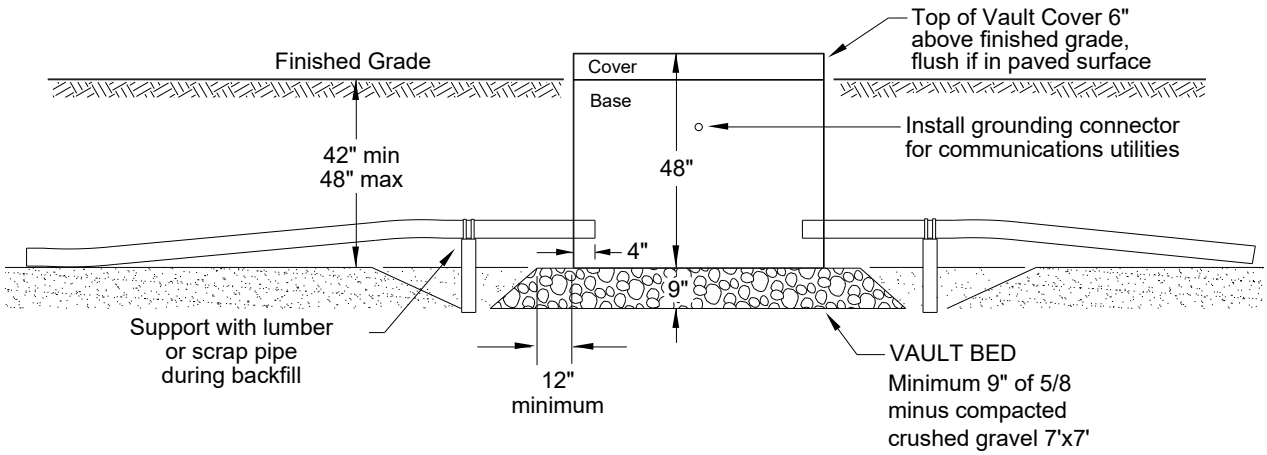

TACOMA POWER
TACOMA PUBLIC UTILITIES

Customer Requirements
Primary Junction Box Installation

C-UG-1500

Application

Installation requirements of precast concrete junction box vaults and associated conduit installations. All excavation work required by this standard shall conform to the safety requirements of WAC 296-155 Part N (Excavation, Trenching, and Shoring) and any other applicable regulations.

In this Standard

Terms

Term	Definition
Construction Inspector	Representative from Tacoma Power T&D Construction Staff. **A pre-construction meeting with the Construction Inspector must happen prior to any construction. Call 253-381-3023.**
New Services Engineer	Tacoma Power engineering staff that provide design, cost estimates, and coordination of the commercial project.

Inspection Requirements

The Construction Inspector will inspect all electrical contractor construction of primary junction boxes and associated conduit installations.

Vault and Cover Requirements

Single Phase	Precast Concrete Vault and Cover
Max. of 4 Primary (15kV) Cables	Tacoma Power Vault 444 with Junction Box Cover #2 Vault: 4’-0” x 4’-0” x 3’-6” Cover: 4’-0” x 4’-0” x 6”
Three Phase	**Precast Concrete Vault and Cover**
5 to 12 Primary (15kV) Cables	Tacoma Power Vault 554 with Junction Box Cover #3 Vault: 4’-8” x 4’-8” x 3’-6” Cover: 4’-8” x 4’-8” x 6”

Installation of Vault and Cover

Figure 1 Vault Foundation and Backfill

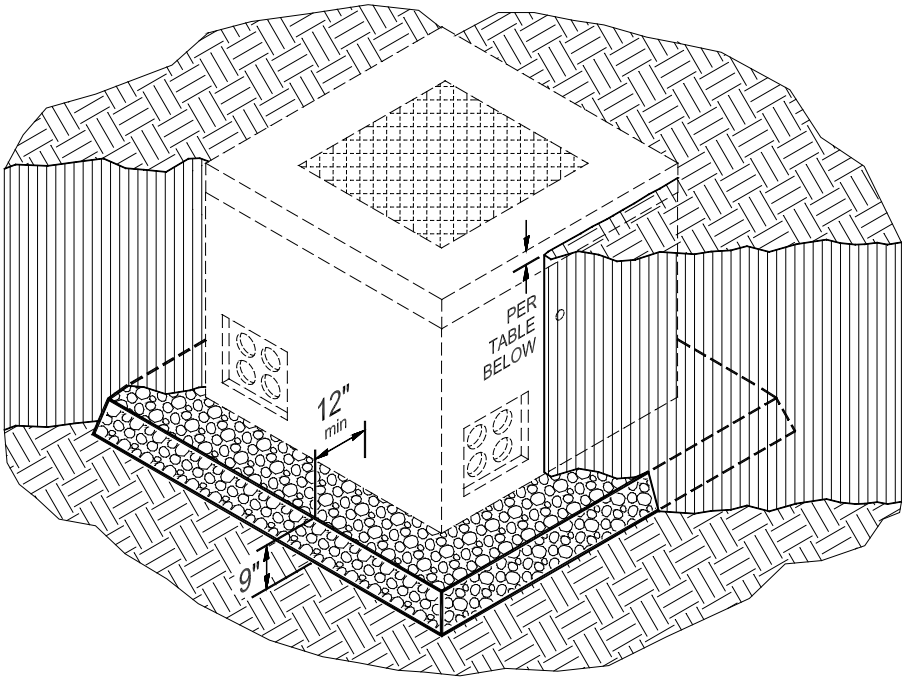

Foundation and Backfill for Vault

The foundation shall be prepared as follows, as directed by the **Construction Inspector**. See Figure 1.

Issue	Action
Excavation for Vault	The **Construction Inspector** will direct the excavation requirements.
Vault Foundation	Vault foundation shall be minimum of 9 inches of 5/8” minus crushed rock, well compacted, extending a minimum of 12 inches beyond the edge of the vault in all directions.
Backfill Material	Clean fill or better as directed by the **Construction Inspector**.
Compaction at Subgrade	Compaction requirements will be determined by the **Construction Inspector**.
Final Grade	The elevation difference between the top of the vault cover and final grade shall be:

Type of final surface	Difference (inches)
Landscaped	6
Paved Surface	flush

Installation of Vault and Cover *(continued)*

Figure 2 Sloping Installations

For junction box vaults installed on a slope, the ***minimum*** dimensions for clearances are:

- Front clearance = **8 feet**
- Side clearance = **8 feet**

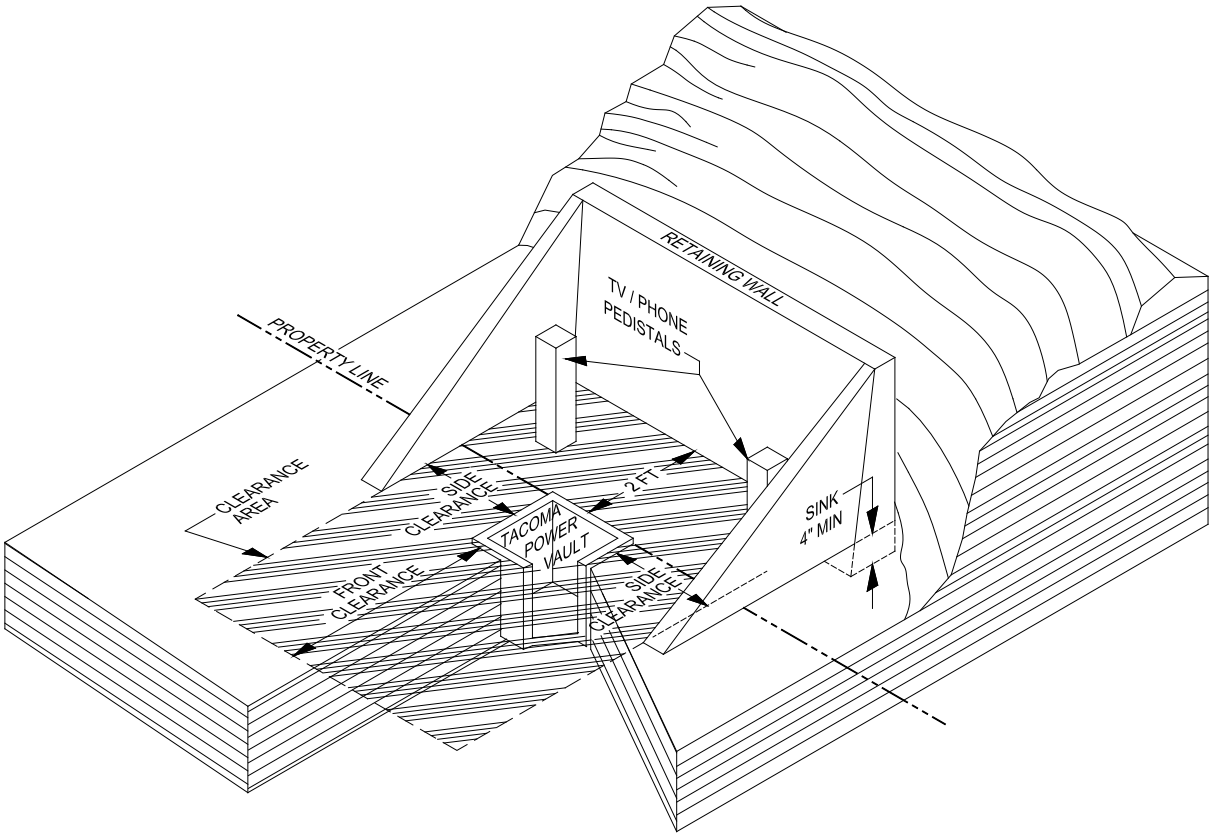

Construction Notes

- The junction box vault must be kept clear of any ***obstructions***, such as:
  - fences, mail boxes, rockeries, berms, and vegetation.
  - bark, sod, ground cover mulch, and rocks, etc., on any part of the structure.
  - trees and bushes extending into the clearance area.
- Phone and TV pedestals must be installed behind the vault on back corners as shown above.
- The clearance area grade shall be level and a retaining wall shall be provided when required by the Tacoma Power Engineer.
  - A wooden, concrete or rockery wall shall have 1 to 4 maximum allowable slope to the property line.
- Typical structures are located in a utility easement, or on a public right-of-way, ***not*** on private property.

Installation of Conduit

Figure 3 General Conduit Layout Into Vault

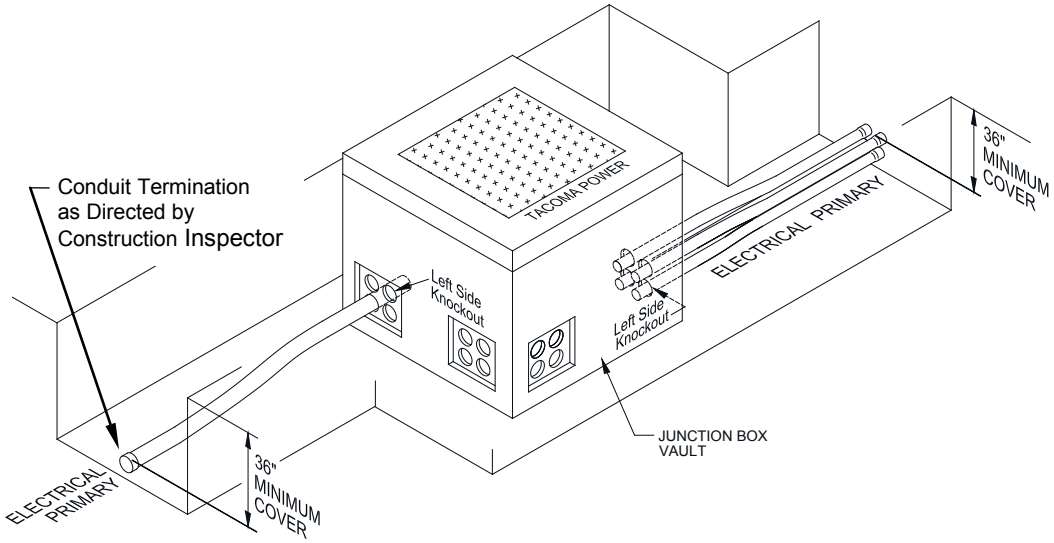

TOP VIEW

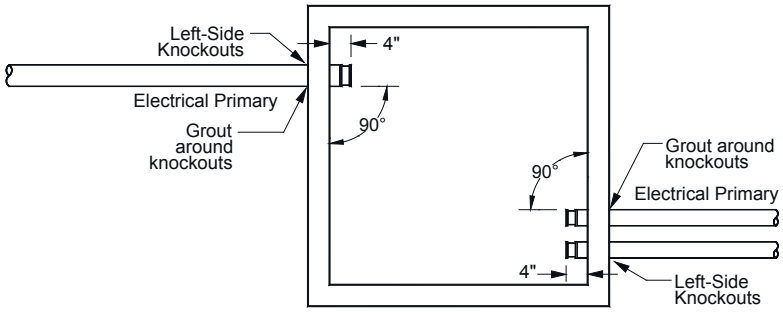

Trench The depth of trench and backfill for primary conduit is listed below:

Issue	Action
Depth	A minimum of 36 inches of cover is required over the primary conduit. With prior approval, exceptions may be granted by the **New Services Engineer**.
Backfill	The trench shall be backfilled with clean fill or better as directed by the **Construction Inspector**.

Installation of Conduit *(continued)*

Conduit Size & Type

The conduit shall be installed per the requirements listed below unless otherwise directed by the **New Services Engineer**:

Issue	Action	
Size of Conduit	Single Phase	2.5 inch
	Three Phase	4 inch
Color and Minimum Grade of Acceptable Conduit	Gray, Sch. 40 PVC	

Conduit Entry

Conduit entering the vault shall consistently enter the **left side** knockouts on all sides. This is for the training of cable in the vault to be in the same direction. The **Construction Inspector** may approve exceptions on a site-by-site basis only. **In any case, all conduit entry into the vault shall allow all cables to be trained in the same clockwise or counter-clockwise direction (see Figure 3).**

Conduit Terminations

Conduit shall be terminated as detailed below:

Issue	Action
Termination of Conduit ***Inside*** the Vault	The conduit into the junction box vault shall: • be perpendicular to the vault wall. • extend 4 inches into the vault. • have bell ends on the conduit ends. Do not glue bell ends. • be sealed into the vault with grout around the knockouts.
Termination of Conduit "stubs" ***Beyond*** the Vault (when required)	The conduit ends shall: • be terminated 5 feet minimum beyond the vault. • install conduit coupling and cap prior to backfill in order to prevent the backfill material from entering the conduit. • be marked with a length of 2.5" Sch. 40 PVC conduit extending vertically a minimum of 4 feet above grade with a *"Call Before You Dig"* sticker.

TACOMA POWER
TACOMA PUBLIC UTILITIES

Customer Requirements
Precast Concrete Vaults
Approved Vendors

C-UG-2000

Application

List of the concrete vaults used in Tacoma Power underground construction, approved vault vendors, and vault part numbers.

Oldcastle Precast 2808 A Street S.E. Auburn, WA 98002 (800) 892-1538	H2 Pre-Cast Inc. 3835 N. Clemons Street East Wenatchee, WA 98802 (509) 884-6644

Description	Tacoma Power MID #	Oldcastle Precast p/n	H2 Pre-Cast p/n
233 Base	35057	20415	VB-TP233
233 Cover (standard)	34669	20434	VL-TP233-2436
233 Cover (nonskid)	34671	20432	VL-TP233-2436SN
233 6in Riser	39828	20470	VR-TP233-6
444 Base	21163	30015	VB-TP444
444 Transformer Cover #1	19451	30210	VL-TP4401228
444 Junction Box Cover #2 (standard)	19447	30165	VL-TP440-13
444 Junction Box Cover #2 (nonskid)	19449	30168	VL-TP440-13SN
444 6in Riser	39970	30250	VR-TP440-6
444 12in Riser	43252	30260	VR-TP440-12
554 Base	21165	60050	VB554-TP
554 Transformer Cover #1 (1Ø)	19457	60250	TPTP-55-1228
554 Transformer Cover #2 (3Ø)	19459	60267	TPTP5666-2044
554 Junction Box Cover #3 (standard)	19453	60150	VL550-13-TP
554 Junction Box Cover #3 (nonskid)	19455	60152	VL550-13-TPSN
554 Junction Box Cover #4 (manhole)	64807	60115	BLTP550-36C
554 6in Riser	39972	60300	VR-TP550-6
554 12in Riser	43254	60310	VR-TP550-12
684 Base	21169	120005	VB-TP687
684 Cover (standard))	63355	120000	VL-TP687-23
684 Cover (nonskid)	21171	120002	VL-TP687-23SN
687 Base	39978	120190	VB-TP687
687 Cover	63356	120185	VT-TP687-02
Manhole Frame/Cover, 36in dia.	20558	4000262	CCRC36-FC
Manhole Cover only, 36in dia.	19426	4000264	CCRC36-C
Manhole 4in Riser, 36in dia.	39976	7017320	MAR36-4
Manhole Frame/Cover, 42in dia.	67978	4000258	CCRC722-TP-R & CCRC722-TP-C
Manhole Cover only, 42in dia.	67979	4000226	CCRC722-TP-C
Manhole 4in Riser, 42in dia.	68010	230120	MAR42-4

Description	Tacoma Power MID #	Oldcastle Precast p/n	H2 Pre-Cast p/n
774 Base	21167	90300	VB774-TP
774 Transformer/Meter Cabinet Cover #1	19461	90595	TPTP88-2060
774 Transformer/Meter Cabinet Cover #2	19463	90605	TPTP810-2060
774 Secondary Service Cabinet Cover #3	50893	90585	TPTP88-2436-3642
774 SSB Cover #4 (standard)	67541	90565	770-23
774 SSB Cover #4 (nonskid)	67540	90555	770-23SN
774 6in Riser	39974	90685	VR770-6
774 12in Riser	43256	90680	VRTP770-12
810 Base	60564	6090740	VBTP810
810 Switchgear Cover (standard)	63354	160180	VLTP810-13-7076
810 Switchgear Cover (nonskid)	60566	160185	VLTP810-13-7076SN
810 Splice Vault Cover (nonskid)	39980	160125	VLTP8103654-23
810 Riser/Reducer for Type 10 Switch	70489	160172	7676-6050
5106 Vault (nonskid)	48250	6060550	VBTP5106
814 Vault	48256	6090750	VTP814-02
818 Vault	48387	6090760	VTP818-02
10X20 Vault	48257	6090770	VBTP1020PV

DRAWN BY: LISA CYFORD

NOTES

1. Size the Below Inlet Grate Device (BIGD) for the storm water structure it will service.
2. The BIGD shall have a built-in high-flow relief system (overflow bypass).
3. The retrieval system must allow removal of the BIGD without spilling the collected material.
4. Perform maintenance in accordance with Standard Specification 8-01.3(15).

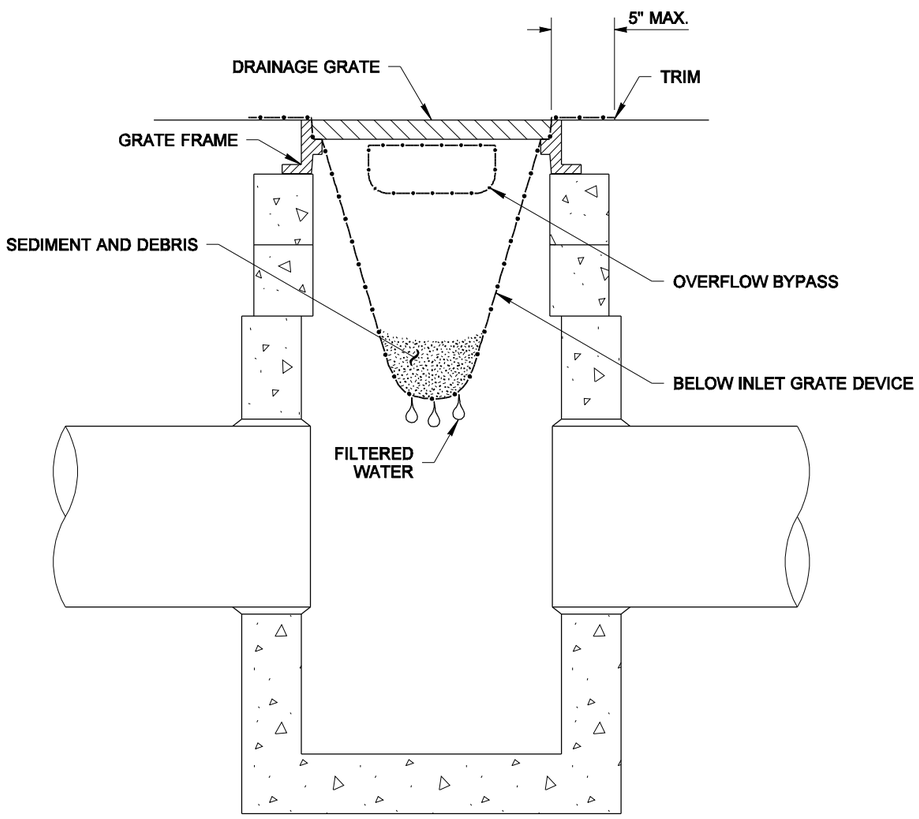

SECTION VIEW

NOT TO SCALE

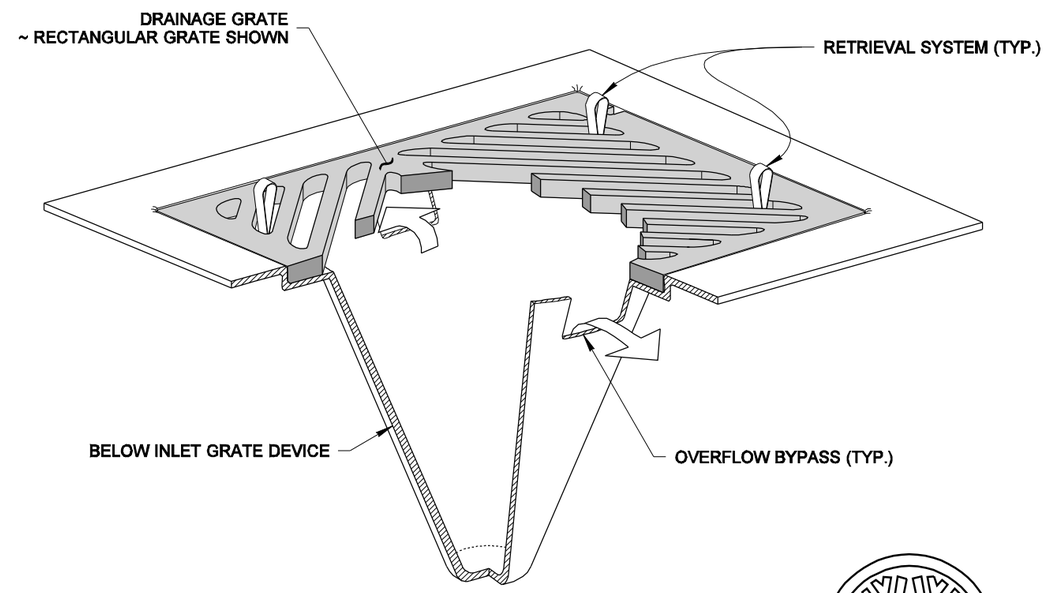

ISOMETRIC VIEW

STATE OF WASHINGTON REGISTERED LANDSCAPE ARCHITECT

MARK W. MAURER

CERTIFICATE NO. 000598

NOTE: THIS PLAN IS NOT A LEGAL ENGINEERING DOCUMENT BUT AN ELECTRONIC DUPLICATE. THE ORIGINAL, SIGNED BY THE ENGINEER AND APPROVED FOR PUBLICATION, IS KEPT ON FILE AT THE WASHINGTON STATE DEPARTMENT OF TRANSPORTATION. A COPY MAY BE OBTAINED UPON REQUEST.

STORM DRAIN INLET PROTECTION

STANDARD PLAN I-40.20-00

SHEET 1 OF 1 SHEET

APPROVED FOR PUBLICATION

Pasco Bakotich III — STATE DESIGN ENGINEER

09-20-07 — DATE

Washington State Department of Transportation

DRAWN BY: LISA CYFORD

DIVIDER PLATE
ELEVATION VIEW
(FOR TYPE 2 JUNCTION BOX ONLY)

JUNCTION BOX DIMENSION TABLE			
MARK	ITEM	BOX TYPE	
		TYPE 1	TYPE 2
A	OUTSIDE LENGTH OF JUNCTION BOX	22"	33"
B	OUTSIDE WIDTH OF JUNCTION BOX	17"	22 1/2"
C	INSIDE LENGTH OF JUNCTION BOX	18" ~ 19"	28" ~ 29"
D	INSIDE WIDTH OF JUNCTION BOX	13" ~ 14"	17" ~ 18"
E	LID LENGTH	17 5/8"	28 5/8"
F	LID WIDTH	12 5/8"	18 1/8"
CAPACITY ~ CONDUIT DIAMETER		6"	12"

NOTES

1. All box dimensions are approximate. Exact configurations vary among manufacturers.
2. Minimum lid thickness shown. Junction Boxes installed in sidewalks, walkways, and shared-use paths shall have a slip-resistant coating on the lid and lip cover plate, and shall be installed with the surface flush with and matched to the grade of the sidewalk, walkway, or shared-use path. The non-slip lid shall be identified with permanent markings on the underside, indicating the type of surface treatment (see Contract Documents for details) and the year of manufacture. The permanent marking shall be 1/8" (in) line thickness formed with a mild steel weld bead and shall be placed prior to hot-dip galvanizing.
3. Lid support members shall be 3/16" (in) minimum thick steel C, L, or T shape, welded to the frame.
4. A 1/4-20 NC × 3/4" (in) stainless steel ground stud shall be welded to the bottom of the lid; include (2) stainless steel nuts and (2) stainless steel flat washers.
5. Bolts and nuts shall be liberally coated with anti-seize compound.
6. Equipment Bonding Jumper shall be # 8 AWG min. × 4' (ft) of tinned braided copper.
7. The System Identification letters shall be 1/8" (in) line thickness formed with a mild steel weld bead. See Cover Marking detail. Grind off diamond pattern before forming letters. For System Identification details, see **Standard Specification 9-29.2(4)**.
8. When required in the Contract, provide a 10" (in) x 27 1/2" (in), 10 gage divider plate, complete, with fasteners, in each Type 2 Junction Box where specified.
9. When required in Contract, provide a 12" (in) deep extension for each Type 2 Junction Box where specified.
10. See the **Standard Specifications** for alternative reinforcement and class of concrete.
11. Headed Anchor Shear Studs must be welded to the Steel Cover Lip Plate and wire tied in two places to the vertical Welded Wire Fabric when in contact with each other. Wire tie all other Headed Anchor Shear Studs to the horizontal Welded Wire Fabric.
12. Lid Bolt Down Attachment Tab provides a method of retrofitting by using a mechanical process in lieu of welding. Attachment Tab shown depicts a typical component arrangement; actual configurations of assembly will vary among manufacturers. See approved manufacturers' shop drawings for specifics.
13. Unless otherwise noted in the plans or approved by the Engineer, Junction Boxes, Cable Vaults, and Pull Boxes shall not be placed within the sidewalks, walkways, shared use paths, traveled ways or paved shoulders. All Junction Boxes, Cable Vaults, and Pull Boxes placed within the traveled way or paved shoulders shall be Heavy-Duty.
14. Distance between the top of the conduit and the bottom of the Junction Box lid shall be 6" (in) min. to 8" (in) max. for final grade of new construction only. See **Standard Specification 8-20.3(5)**. Where adjustments are to be made to existing Junction Boxes, or for interim construction stages during the contract, the limits shall be from 6" (in) min. to 10" (in) max. See **Standard Specification 8-20.3(6)**.

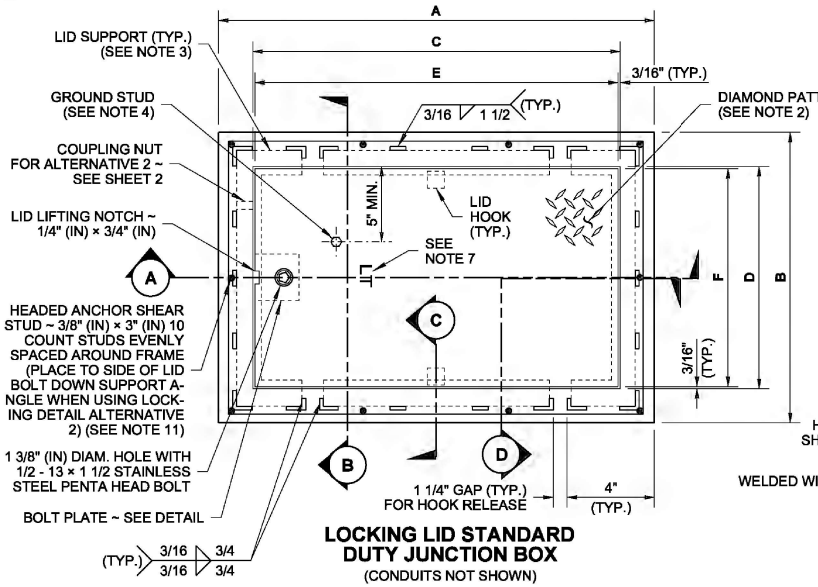

LOCKING LID STANDARD DUTY JUNCTION BOX
(CONDUITS NOT SHOWN)

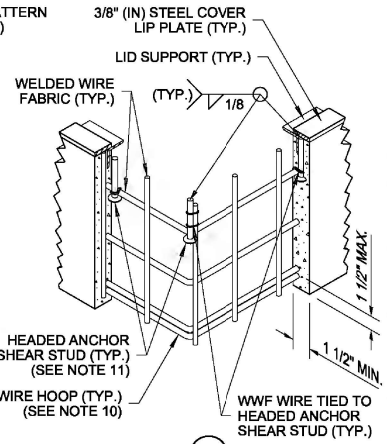

SECTION D
PERSPECTIVE VIEW

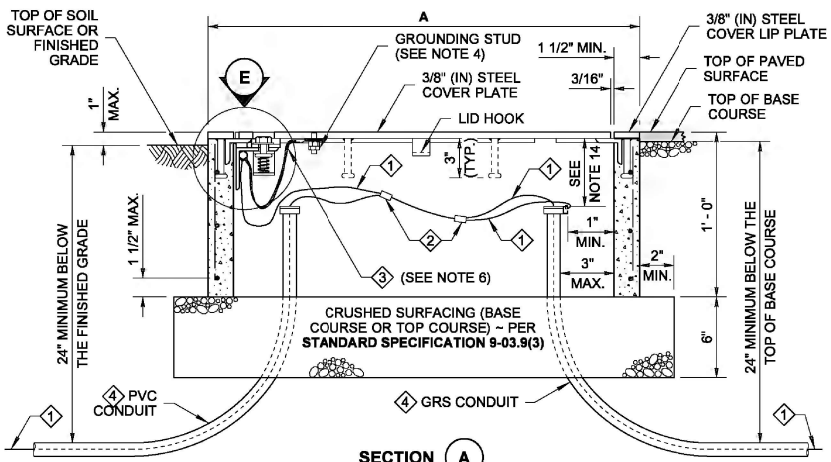

SECTION A

1. Equipment Grounding Conductor
2. Copper Solderless Crimp Connector
3. Equipment Bonding Jumper (See Note 6)
4. See Contract for conduit size and number

COVER MARKING DETAIL

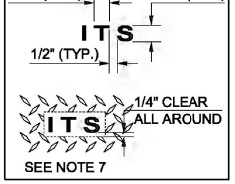

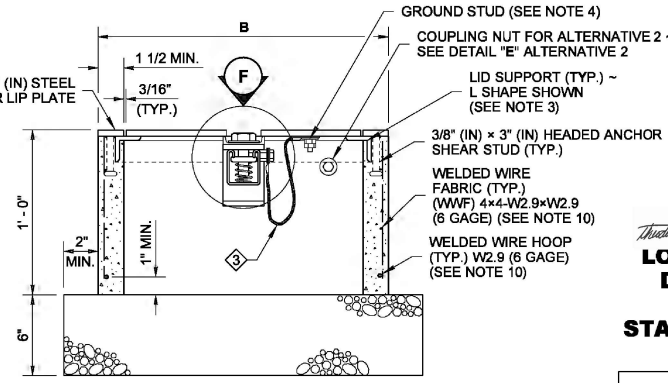

SECTION B
(CONDUITS NOT SHOWN)

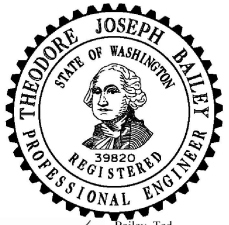

Bailey, Ted
Apr 25 2016 9:32 AM

LOCKING LID STANDARD DUTY JUNCTION BOX TYPES 1 & 2 STANDARD PLAN J-40.10-04

SHEET 1 OF 2 SHEETS

APPROVED FOR PUBLICATION
Carpenter, Jeff
Apr 28 2016 3:12 PM
STATE DESIGN ENGINEER
Washington State Department of Transportation

DRAWN BY: LISA CYFORD

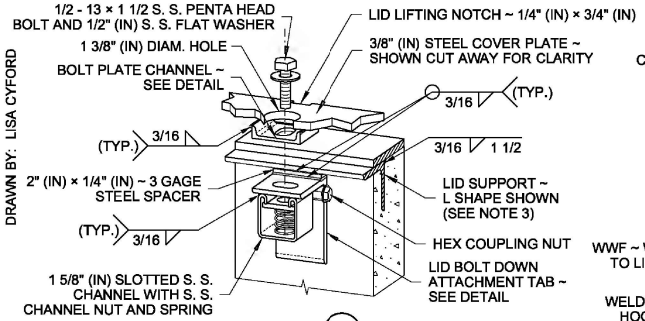

DETAIL (F)

ALTERNATIVE 1 SHOWN PERSPECTIVE VIEW

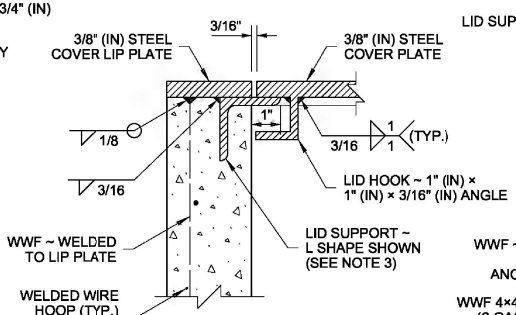

SECTION (C)

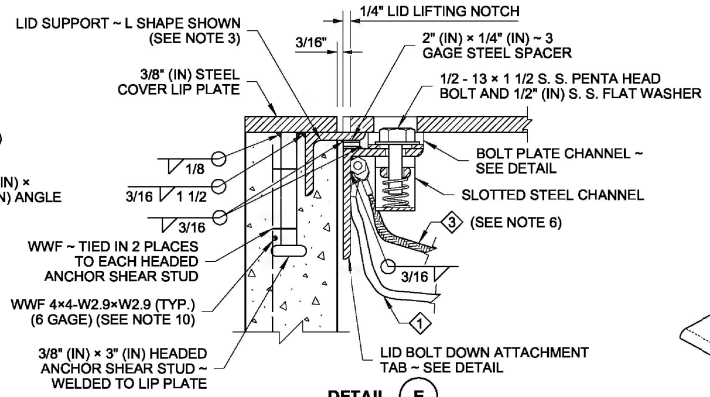

DETAIL (E)

ALTERNATIVE 1 SHOWN

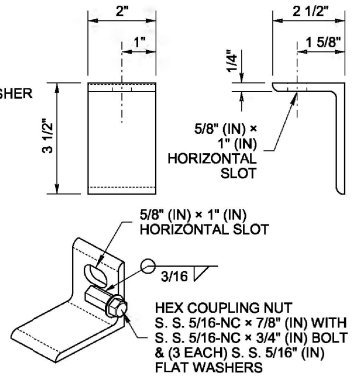

ALTERNATIVE 1
LID BOLT DOWN ATTACHMENT TAB
(SEE NOTE 12)

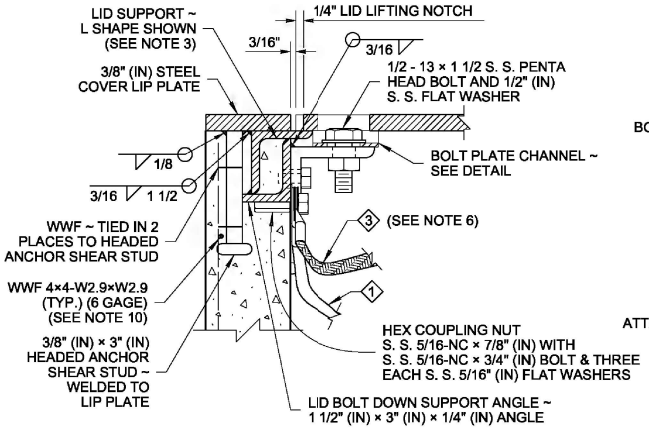

DETAIL (E)

ALTERNATIVE 2 SHOWN

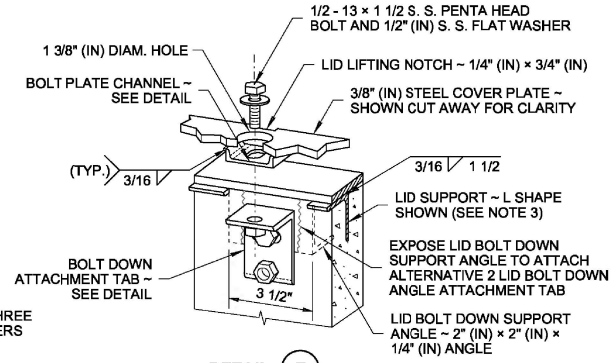

DETAIL (F)

ALTERNATIVE 2 SHOWN PERSPECTIVE VIEW

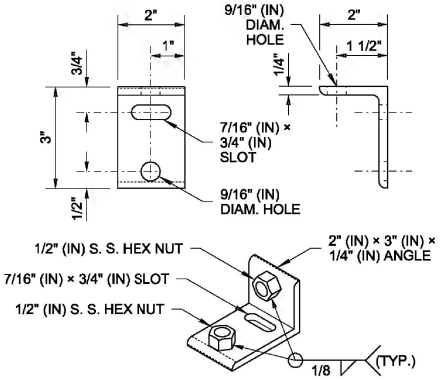

ALTERNATIVE 2
LID BOLT DOWN ATTACHMENT TAB
(SEE NOTE 12)

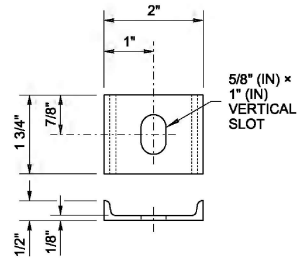

BOLT PLATE CHANNEL

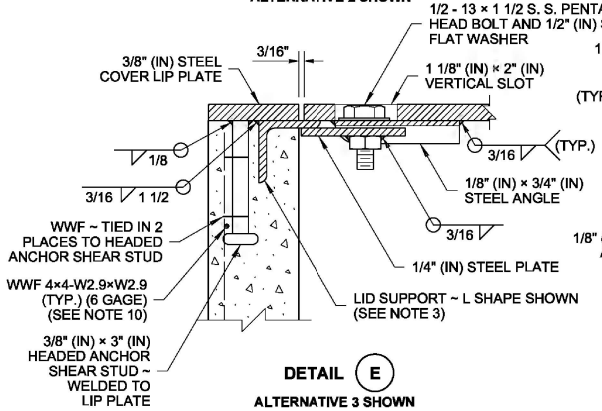

DETAIL (E)

ALTERNATIVE 3 SHOWN

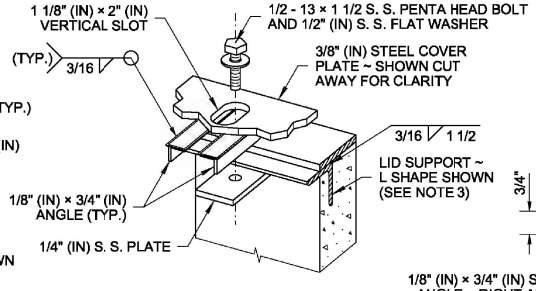

DETAIL (F)

ALTERNATIVE 3 SHOWN PERSPECTIVE VIEW

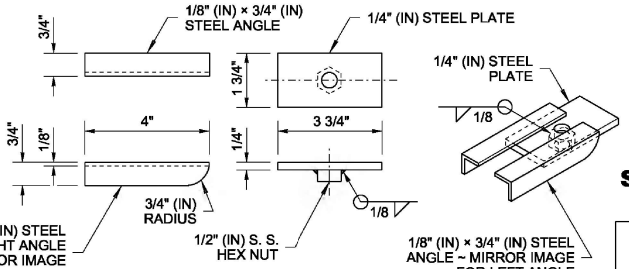

ALTERNATIVE 3
LID BOLT DOWN ATTACHMENT TAB
(SEE NOTE 12)

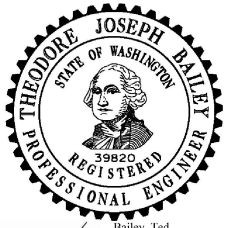

Theodore Joseph Bailey
Bailey, Ted
Apr 25 2016 9:33 AM

LOCKING LID STANDARD DUTY JUNCTION BOX TYPES 1 & 2 STANDARD PLAN J-40.10-04

SHEET 2 OF 2 SHEETS

APPROVED FOR PUBLICATION
Carpenter, Jeff
Carpenter, Jeff
Apr 28 2016 3:12 PM
STATE DESIGN ENGINEER
Washington State Department of Transportation

APPENDIX B

TRAFFIC CONTROL HANDBOOK

***** Note: Traffic Control Handbook front-end excerpt and website provided below for contractor convenience. For the full Traffic Control Handbook with example traffic control plans visit the website below. *****

COT Traffic Control Handbook Website:
https://www.cityoftacoma.org/UserFiles/Servers/Server_6/File/cms/PublicWorks/Engineering/DesignManual/2021TrafficControlHandbook.pdf

TRAFFIC CONTROL HANDBOOK

MUST MAINTAIN PEDESTRIAN AND DISABILITY ACCESS AT ALL TIMES

Tacoma

City of Tacoma
Department of Public Works

Last updated: 2/5/21

City of Tacoma
Public Works Department

INTRODUCTION

This manual is intended for use by any person, firm or corporation, public or private, when involved in construction, maintenance or any activity that alters the normal flow of traffic, vehicular or pedestrian, on any City right-of-way.

This manual shall be used in conjunction with Part VI of The Manual on Uniform Traffic Control Devices (MUTCD) for the installation of temporary traffic control and the Access Board's Guidelines for Accessible Public Rights -of-Way (2002), (www.access-board.gov/).

Authority to establish local rules regarding channelization and traffic control is permitted by Washington Administrative Code (WAC) 308.330.265.

Unless specifically addressed in this manual, when the term “should” is used in the MUTCD to describe a condition or method for traffic control, it means that if that suggestion is not used an equally effective method will be used. It does not eliminate the responsibility to address the situation.

This manual does not prohibit the use of additional traffic control or warning devices as long as the minimum conditions are met.

PERMITS

A permit must first be obtained from the Public Works Department by any person, firm or corporation working in City right-of-way that alters the normal flow of traffic or makes any public place dangerous.

Provisions for obtaining a permit are outlined in Tacoma Municipal Code Chapter 10.22.

All applications for permits must have a comprehensive traffic control plan attached for review by the Traffic Engineer. Permits will not be issued unless the Traffic Engineer has approved the traffic control plan.

MUNICIPAL AGENCIES

Municipal agencies and Utilities are not required to obtain a permit for routine maintenance and repairs, but must notify the Traffic Engineer a minimum of 72 hours in advance if the following conditions apply:

1. Closing any street (see attached street closure requirements).
2. Altering or detouring traffic during commute hours on arterial streets (7 a.m. – 9 a.m. and 4 p.m. – 6 p.m.).
3. The activity or obstruction will be in place for more than 8 hours.
4. The activity or obstruction is during the hours of darkness.
5. The activity reduces traffic on arterial streets to less than one lane in each direction.

GENERAL RULES

The following list of rules must be followed while involved in construction, maintenance or other activity in City right of way unless specifically addressed by the Traffic Engineer.

1. All traffic control devices must meet the requirements established by the Manual on Uniform Traffic Control Devices.

2. No activity will be placed in such a way as to detour, slow or alter traffic flow during peak commute hours. These times are generally from 7 a.m.– 9 a.m. and 3:30 p.m. – 6 p.m. The Traffic Engineer may allow an exception with prior approval.

3. An approved traffic control plan must be on-site and accessible for inspection at all times by law enforcement or inspectors.

4. Traffic control plans and activities must include the following components:
   a. Advanced Warning Area: Signs and other devices inform drivers of what to expect.
   b. Transition Area: Channelization devices move traffic from the normal flow to the desired path.
   c. Activity Area: Area where the work takes place.
   d. Buffer Space: Area used to separate traffic from the work activity area and provides recovery space for an errant vehicle.
   e. Termination Area: Area used to return traffic to the normal path.

5. Pedestrian and disability access must be maintained throughout the period of time construction is underway. This does not just apply to the final product, but accessibility must be maintained during the actual construction. Safe, clearly marked routes must be maintained through or around the construction activity at all times. The use of temporary walkways with width, slope, and cross-slope compliant to the maximum extent feasible shall be incorporated on the job site. Surfaces must be firm, stable, and slip resistant. Channeling and barricading must be used to separate pedestrians from traffic. Adequate barricading must be addressed to prevent visually impaired pedestrians from entering work zones. Alternate pedestrian circulation routes with appropriate signage that can be accessed by people who use mobility aids (wheelchairs, walkers, scooters, etc.) The alternate circulation path shall have a minimum width of 5 feet and parallel the disrupted pedestrian access route when practicable. Barricades and channelizing devices shall be continuous, stable, non-flexible, and shall consist of a wall, fence, or enclosure specified in section 6F of the MUTCD. A solid toe rail should be attached such that the bottom edge is 6 inches maximum above the walkway surface. The top rail shall be parallel to the toe rail and shall be located 36 inches minimum and 42 inches maximum above the walkway surface. If drums, cones, or tubular markers are used to channelize pedestrians, they shall be located such that there are no gaps between the bases of the devices in order to create a continuous bottom, and the height of each individual device shall be no less than 36 inches.

6. Persons in charge of maintaining or establishing traffic control and channelization must have a certified flagger control card in their possession and must be on the site at all times or be represented by another knowledgeable, certified person.

7. A flagger cannot be used to direct traffic through a signalized intersection against the signal indications. When flaggers are used near signalized intersections, care will be used to clear the intersection of traffic before the signal change.

8. In some situations, Signal modifications may be used to support the traffic control plan. The traffic Signal Shop shall make all modifications, and all modifications must be approved by the Traffic Engineer.

9. A uniformed police officer is required to direct traffic through a signalized intersection against the signal indications.

10. Police officers may also be required during activities for traffic calming if speeds are high, pedestrian or vehicular traffic volume is extremely high, or during emergencies.

11. To minimize the disruption to access to adjacent properties, and to Pierce Transit operations, the lane closure area shall be limited to that area of active work and necessary for appropriate lane closure tapers. The Contractor shall stage work to maintain access to and egress from all properties at all times. An approved traffic control plan and permit shall be posted on the job site for review by City officials. Construction Inspectors shall ensure the approved traffic

control plan is on site at all times. Any approved Traffic control plans the Contractor doesn't follow are in violation of the Standard Specifications which are included in the contract. It is the inspector's job to have them comply or Stop work. Jobs having permits only and not following the approved Traffic Control plan is a violation of Tacoma Municipal Code 10.22.080. The work can be stopped or a violation infraction can be imposed.

12. When parking lanes are closed due to construction, “no parking” portables will be installed at least 72 hours in advance of the closure in unrestricted areas and 48 hours in advance in time restricted areas. The message on the portables shall establish the date and hours for no parking.

13. During emergencies where life, property or public safety is in danger, conditions listed may be changed. Traffic control will be addressed along with the initial response. (See attached page for emergency contact numbers.)

14. The Traffic Engineer may allow reduced speed limits in construction area zones. Request for speed reduction must be included in the traffic control plan.

15. All signs and cones shall be removed from the right-of-way when traffic control is not in effect.

16. The contractor may be required to discontinue work if possible conflict exists with special events such as parades, sporting events, miscellaneous rallies, and large public meetings. Information concerning such events can usually be obtained from the City Clerks Office, tel. (253) 591-5171.

17. Maintenance of 2-way traffic on arterial streets at all times except on one-way streets. Additional width for facilitating traffic flow may be obtained by prohibiting on-street parking adjacent to the work zone.

18. No work shall be scheduled on streets or sidewalks within the City of Tacoma Business Districts from Thanksgiving Day through New Year’s Day.

19. All traffic control devices used at night, particularly signs, barricades and channelizing devices, must have Type C steady burn lights. Requests to reduce the number of lights used on channelizing devices must be specifically detailed on the approved traffic control plan.

20. Any use of steel plates by contractor shall be for overnight purposes only and shall be used over weekends with prior approval by City or its inspector. They may not be used on steep grades, 8 percent or greater, they must have asphalt ramps/wedges around the plates and a non-skid surface at all times. All plates must be pinned down and the City of Tacoma may require combinations of plates to be welded together. Warning signs must be appropriately placed to caution motorists of upcoming steel plates. Steel plates are not allowed if snow is expected or if there is a potential for snow. The Inspector must review and approve all steel plate placements prior to leaving the job site. If located in the pedestrian path, they shall comply with ADA standards.

Failure to comply with the provisions of this manual is a traffic infraction and, notwithstanding any fines or penalties levied against the person, firm or corporation involved, if a safety hazard exists, the work may be ordered stopped and the obstruction cleared by the person, firm or corporation responsible or by the City at that responsible party’s expense.

http://www.cityoftacoma.org/
http://wspwit01.ci.tacoma.wa.us/govME/Admin/Inter/StartPage/default.aspx
http://wspwit01.ci.tacoma.wa.us/download/PDF/Traffic_Control_Handbook.pdf

Special Traffic Requirements

The contractor shall notify the following departments three (3) working days prior to any street closure.
Pierce Transit requires five (5) working days prior to any route detours.

Department	Phone	Fax	Email
Traffic Engineering	**591-5305**	**591-5533**	trafficcontrolplans@cityoftacoma.org
Tacoma Fire Department	**591-5775**	**591-5034**	dutyofficer@cityoftacoma.org tacomafiredepartment@cityoftacoma.org
Tacoma Police –Ops	**591-5932**	**594-7842**	TacomaPoliceEvents@cityoftacoma.org
LESA	**798-4721 Opt #3**	**798-2708**	commsupsb@southsound911.org
Sound Transit Link	**206-370-5674**		Denise.Ahuna@soundtransit.org
Pierce Transit Service Impacts	**377-5027**	**589-6364 or 589-6367**	serviceimpacts@piercetransit.org mdavilla@piercetransit.org
Pierce Transit Events Coordinator	**581-8001**	**984-8161**	bnelson@piercetransit.org
Public Works/Signal and Streetlighting	**591-5287**	**593-7745**	gyotter@cityoftacoma.org
Public Works/Street Ops	**591-5495**	**591-5302**	streetoperations@cityoftacoma.org
School Trans Office	**571-1853**	**571-1932**	transportation@tacoma.k12.wa.us
First Students		**272-7799**	Elizabeth.Anderson@firstgroup.com
Chief Leschi Schools	**445-4000**		Cindy.Hanson@leschischools.org
UWT Facilities Services	**692-5700**	**692-5705**	facility@uw.edu
Off-Duty Police Officer	**591-5932**		TacomaPoliceEvents@cityoftacoma.org
Tacoma Refuse	**591-5544**	**591-5547**	rcollections@cityoftacoma.org
Tacoma First	**311 (city limits)**		csc@cityoftacoma.org

Include the following information when notifying the above departments.

Name of street to be closed & the extent of the closure (between which two roads).
Stipulate whether or not the area is to be open to local traffic & emergency vehicles.
State the date(s) & hour(s) the closure will be in effect.
Give the reason for the closure.
Provide detour information.
State who/which firm is performing the work.
Provide the name and telephone number of a contact person.

Recommended Publications

As a contractor you will have many opportunities for setting up traffic control. To comply with national standards, we recommend having the **MUTCD** (Manual on Uniform Traffic Control Devices) for future reference.

To order hard copies or CD versions of the MUTCD please go to one of the links below:
American Association of State Highway Organizations at: https://bookstore.transportation.org/
Institute of Traffic Engineers at: http://www.ite.org/bookstore/index.asp

American Traffic Safety Services Association at: http://www.atssa.com/

Things to Think About

Before the traffic control plan is drawn visit the site and look for special circumstances that may be unique to the area. For example work being done on the sidewalk may be a hazard if someone walks out a door into your wet cement or a tool may fall on someone's head if someone is in a lift washing windows. Call Pierce Transit if you need to do work at a bus stop. Transit requires five (5) days notice for route detours. Transit will inform citizens and move or temporarily close the stop. Keep in mind that pedestrians need 5' of unobstructed walking area. If roadwork needs to be done on an arterial street, traffic control devices shall be removed during peak hour traffic (7am to 9am and 4pm to 6pm). For further information see our TRAFFIC CONTROL HANDBOOK.

http://www.cityoftacoma.org/
http://wspwit01.ci.tacoma.wa.us/govME/Admin/Inter/StartPage/default.aspx
http://wspwit01.ci.tacoma.wa.us/download/PDF/Traffic_Control_Handbook.pdf

APPENDIX C

ENVIRONMENTAL CID DETERMINATION AND WDA PERMIT

Tacoma - Pierce County
Health Department
Healthy People in Healthy Communities
www.tpchd.org

WDA 2776 CID

WASTE DISPOSAL AUTHORIZATION

(XX) Non-Asbestos ( ) New

( ) Asbestos (XX) **Amendment (CID SOILS ONLY)**

A. Generator Name: City of Tacoma

B. Generator Address: ROW along South 17th Street between Court D and Court E.

C. Transporter Name: TBD

D. Technical Contact: Aaron Waggoner, GeoEngineers Phone: 253-579-2176, awaggoner@geoengineers.com

E. Waste Description: PCE and TCE contaminated soils

( ) Sludge (**XX**) Solid ( ) PCS ( ) Other

F. Approved Quantity: **Project total of 1,860 tons**

G. **Actual Quantity (Filled in upon disposal):**

H. Multiple Loads: (**XX**) Yes ( ) No

I. Dates of Disposal: April 2024 through February 2025

J. Testing: NWTPH-HCID/Gx/Dx, VOCs, SVOCs and PAHs, RCRA metals

K. Reviewed by Department of Ecology: (**XX**) Yes ( ) No

L. Disposal/Transportation Requirements: **Contained-in- Determination (CID) SOILS ONLY. A copy of this WDA must be transported with EACH load of waste and presented to the LRI Landfill Scale House Operator. Loads shall conform to all requirements in the Ecology letter, City of Tacoma CID Approval Letter dated November 30, 2023 (attached).** Loads shall be covered during transport to the landfill to prevent fugitive emissions of contaminated soils.

M. Facility: (**XX**) **LRI Landfill (304th Street LF), 30919 Meridian Street, Eatonville, WA**

CERTIFICATION

Use of this document to deliver waste to the landfill noted above, certifies that the generator and/or applicant;

- Agree that the information submitted is true, accurate and complete to the best of their knowledge and that all known and suspected hazards have been disclosed.
- Agree that the generator and/or transporter will abide by all conditions specified in line (L) or any attachments.

If the generator and/or applicant do not agree to the above certification, this authorization is null and void.

AUTHORIZED BY:

Dean Williams, TPCHD (253) 649-1905

Cc: LRI LF Scalehouse via email

APPROVED

December 20, 2023

TACOMA-PIERCE COUNTY HEALTH DEPARTMENT

ENVIRONMENTAL HEALTH DIVISION

For Official Use Only

STATE OF WASHINGTON
DEPARTMENT OF ECOLOGY
Southwest Region Office
PO Box 47775, Olympia, WA 98504-7775 • 360-407-6300

November 30, 2023

Basel Kitmitto
City of Tacoma
747 Market Street, Room 544
Tacoma, WA 98402

Re: Contained-In Determination for F001 and F002 Contaminated Soils at 17th and Fawcett Located at South 17th Street between Court D and Court E, Tacoma, Washington.

References:

1) Electronic Mail and data package attachments from Aaron Waggoner, GeoEngineers, Inc., to Ron Kaufmann, Department of Ecology, dated August 31, 2023, and September 1, 2023.
2) Electronic Mail from Aaron Waggoner, GeoEngineers, Inc., to Ron Kaufmann, Department of Ecology, dated July 26, 2023.
3) Electronic Mail from Ron Kaufmann, Department of Ecology, to Aaron Waggoner, GeoEngineers, Inc., dated July 7, 2023.
4) Electronic Mail from Aaron Waggoner, GeoEngineers, Inc., to Ron Kaufmann, Department of Ecology, dated June 29, 2023.
5) Electronic Mail and Attached Request for Contained-In Determination from Aaron Waggoner, GeoEngineers, Inc., to Ron Kaufmann, Department of Ecology, dated May 26, 2023.

Dear Basel Kitmitto:

The Washington State Department of Ecology (Ecology) received a contained-in determination request from your environmental consultant, GeoEngineers, Inc., for F001 and F002 listed waste trichloroethylene (TCE) and tetrachloroethylene (PCE) contaminated soils to be excavated on the property located along the South 17th Street right-of-way between Court D and Court E, Tacoma, Washington.

Analytical data were submitted to Ecology to determine if these soils contaminated with F001 and F002 listed dangerous waste constituents may be exempt from management as dangerous

wastes per the "Contained-In Policy"[1]. Ecology understands that these contaminated soils do not designate under federal characteristics (WAC 173-303-090) or State-only criteria (WAC 173-303-100).

Based on the information received and reviewed, Ecology has determined that the **1,860 tons** of TCE and PCE contaminated soils to be excavated (**attached Figure 3**) are contaminated with F001 and F002 listed dangerous waste constituents (TCE and PCE) at concentrations that do not warrant management as dangerous wastes. Ecology will not require disposal of these **1,860 tons** of TCE and PCE contaminated soils as F001 and F002 listed dangerous wastes at a RCRA permitted dangerous waste treatment, storage and disposal (TSD) facility, provided that all of the following conditions are implemented. This contained-in determination applies only to the contaminated soils, and does not pertain to contaminated water or any mixture of contaminated soils and fluid.

You or your environmental consultant, GeoEngineers, Inc., shall:

- Ensure that no standing water is present within the containers or trucks holding the contaminated soils. All water must be removed to the maximum extent possible from each container or truck and managed as F001 and F002 dangerous wastes or as otherwise allowed under Chapter 173-303 WAC. Adding bentonite or similar materials to absorb standing F001 and F002 listed waste contaminated water in the containers is not allowed. Mixtures of bentonite or similar materials and the listed waste contaminated water must be managed as F001 and F002 listed dangerous wastes;

- Directly deliver the soils to a solid waste landfill or transfer station permitted under Chapter 173-351 WAC and/or Chapter 173-350 WAC inside Washington State. If taken directly to the solid waste landfill, no off-loading of the contaminated soils is allowed between the cleanup site and the permitted solid waste landfill; If taken to the transfer station, the intermodal containers from the cleanup site will be loaded on to rail cars, removal of the contaminated soils from the intermodal container at the transfer station is not allowed;

- If you plan to deliver the contaminated soils to a <u>landfill outside Washington State</u>, you must FIRST submit to Ecology <u>written approval for the contaminated soil disposal from the State hazardous waste program and the out of state landfill,</u> **before** the soils are delivered to the out of state landfill.

- If you load the contaminated soils directly onto the truck bed or the contaminated soils are transported in roll-off bins, the truck or the roll-off bins must be lined with plastic and properly covered to prevent leaks, spills or dispersion due to wind.

[1] Washington State Department of Ecology Contained-in Policy, dated February 19, 1993

- Dispose of the contaminated soils at the permitted solid waste landfill by February 28, 2025. This contained-in determination letter is no longer valid after February 28, 2025, and the contaminated soils shall be managed as dangerous wastes after this date;

- Provide copies of all signed solid waste landfill receipts or a certificate of disposal issued by the receiving landfill for these contaminated soils to Ecology, attention of Ron Kaufmann, by March 31, 2025. This is an important verification step for you and your consultant to follow in order for this Ecology decision to be valid;

- Notify Ecology before disposal of the contaminated soil if the amount exceeds the approved amount or if the excavation limits exceed the lateral extents shown on Figure 3 in this letter or the vertical extent exceeds a depth of twelve (12) feet below the existing grade surface. Ecology needs to make sure that the additional soil qualifies for a contained-in determination;

- Notify Ecology via email at least five (5) days before removing the contaminated soils approved in this letter. This notice gives Ecology the option of observing the removal. If Ecology will observe the removal, we will notify you by phone or email at least 24 hours before the day the soil removal begins.

- Do not consolidate these contaminated soils with other soils that do not pertain to this contained-in determination;

- Ensure that the transporter is properly trained to handle hazardous waste so that the transporter manages the contained-in determination soils during transport in a manner that is protective of human health and the environment;

- Take measures to prevent unauthorized contact with these contaminated soils at all times;

- Provide instructions to the landfill operator that these soils are **not** to be used for daily, intermediate, or final cover;

- Provide copies of all soil analytical data to the landfill operator, upon request; and

- Do not send these contaminated soils to any incinerator, thermal desorption unit or recycling facility unless that facility is a RCRA Subtitle C permitted dangerous waste TSD facility.

Ecology issued this determination based on the information provided and reviewed to date. This Ecology determination will be rescinded if Ecology finds that the information submitted by the property owner or its environmental consultant is materially false, misleading, otherwise does not accurately represent the site conditions, or if the Ecology requirements listed above are not followed.

This written decision only applies to the **1,860 tons** of specified TCE and PCE contaminated soils to be generated during excavation activities from areas described in your request (references 3 and 4). It does not apply to any other media. Any data used for this contained-in determination is intended for use in determining the proper disposal of the above stated TCE and PCE contaminated soil according to the Washington State Dangerous Waste Regulations (Chapter 173-303 WAC) and Ecology Contained-in Policy. This letter is not an Ecology approval for dangerous waste designation or disposal of contaminated soils that may be generated or already excavated from other areas in this property.

This letter is not a No Further Action (NFA) letter and not written approval for any cleanup action plan you may have submitted. Instead, this letter only addresses the procedures for disposal of the contaminated soils according to the Washington State Dangerous Waste Regulations (Chapter 173-303 WAC). Regulatory decisions regarding the cleanup action, applicable soil and groundwater cleanup levels and any other cleanup issues must comply with the requirements under Ecology Model Toxics Control Act (Chapter 173-340 WAC). Local agencies may have the authority to impose additional requirements on this waste stream.

If you fail to comply with the terms of this letter, Ecology may issue an administrative order and/or penalty as provided by the Revised Code of Washington, Sections 70A.300.090 and/or .120 (Hazardous Waste Management Act).

If you have any questions concerning this letter, please contact Ron Kaufmann at (360) 522-0536 or ron.kaufmann@ecy.wa.gov.

Sincerely,

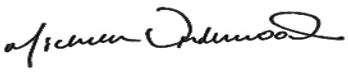

Michelle Underwood
Section Manager
Hazardous Waste and Toxics Reduction Program

Sent by Certified Mail:
Sent by Email: Basel Kitmitto, bkitmitto@cityoftacoma.org

Enclosures: Figure 3

ecc: Aaron Waggoner, GeoEngineers, Inc., awaggoner@geoengineers.com
Katy Atakturk, GeoEngineers, Inc., katakturk@geoengineers.com
Greg Caron, Ecology, greg.caron@ecy.wa.gov
Kurt Walker, Ecology, kurt.walker@ecy.wa.gov
Paul Bianco, Ecology, paul.bianco@ecy.wa.gov

Mindy Collins, Ecology, mindy.collins@ecy.wa.gov
Brittany McManus, Ecology, brittany.mcmanus@ecy.wa.gov
Elaine Snouwaert, Ecology, elaine.snouwaert@ecy.wa.gov
Tom Middleton, Ecology, thomas.middleton@ecy.wa.gov

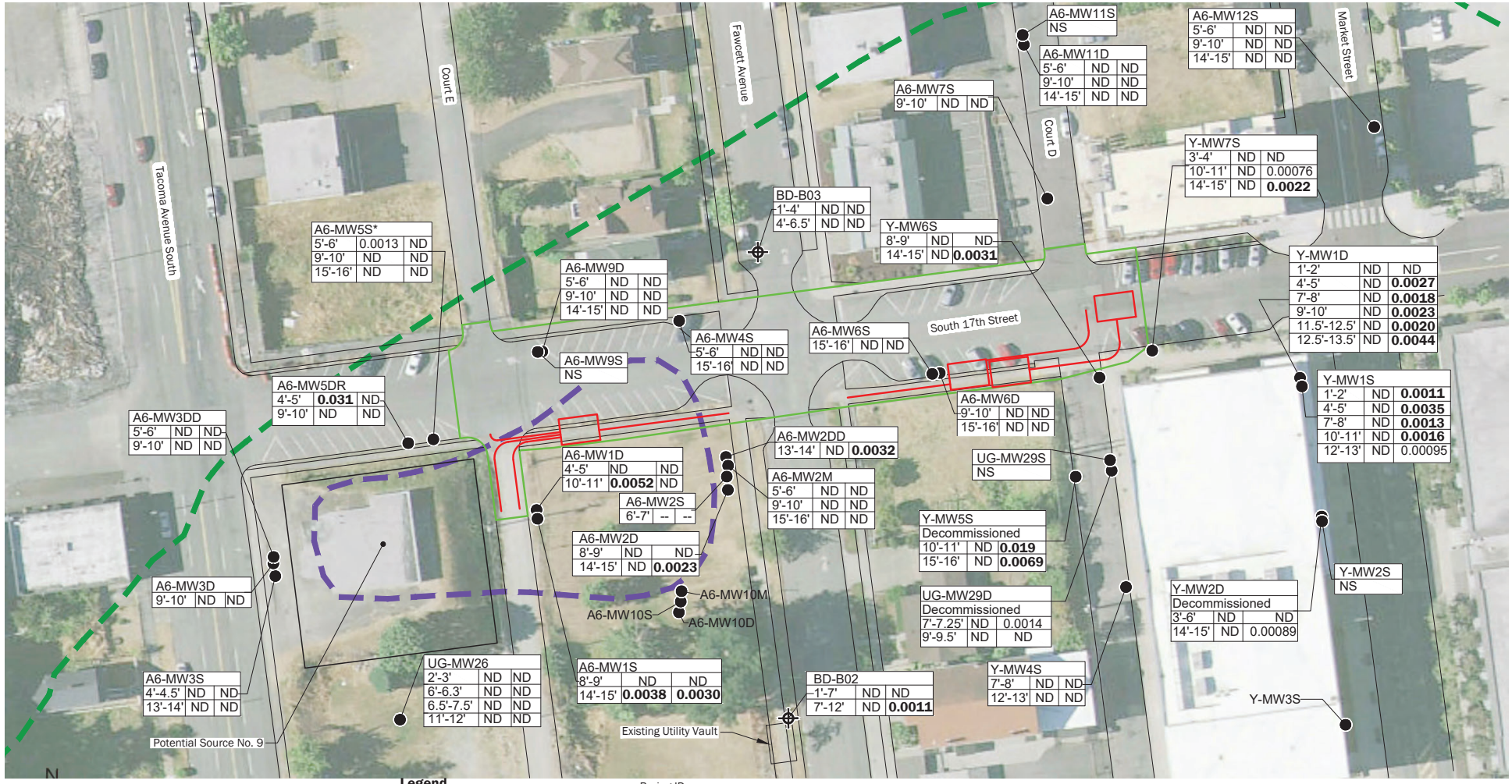

Notes:

1. The locations of all features shown are approximate.
2. This drawing is for discussion purposes only. It is intended to assist in a discussion with the City of Tacoma and the Dept. of Ecology. GeoEngineers, Inc. cannot guarantee the accuracy and content of electronic files. The master file is stored by GeoEngineers, Inc. and will serve as the official record of this communication.
3. Image Source: Pierce County GIS (image date 2021).
4. Analytical Data Source: 2023 Draft Remedial Investigation, University of Washington, Tacoma Campus, Tacoma, Washington.

Vertical Datum: City of Tacoma Datum (NGVD 29).

Projection: NAD83 Washington State Planes, South Zone, US Foot.

Legend

- Approximate Project Limits
- Proposed Utility Vault
- Proposed Utility Duct Bank
- Groundwater Monitoring Well Location
- Soil Boring Location
- Shallow TCE Groundwater Plume Boundary
- Shallow PCE Groundwater Plume Boundary

Boring ID

A6-MW2D		
8'-9'	ND	ND
14'-15'	ND	0.0023

Depth — PCE — TCE

Boring ID with Soil Sample Depths PCE and TCE Concentrations in mg/kg (Sampling Dates Vary)
ND = Not Detected Greater Than Laboratory Reporting Limit
NS = Boring Not Sampled
MTCA Screening Levels: PCE = 0.05 mg/kg, TCE = 0.03 mg/kg
* Samples Collected from Deep Well Boring

N S E W

60 0 60
Feet

Shallow Soil Concentrations of PCE and TCE in mg/kg

City of Tacoma TPU South 17th Street - Court D to E
Tacoma, Washington

GEOENGINEERS

Figure 3

P:\0\0570186\CAD\00\GD Letter Report\0570186\00_F02 to F05_Soil and GW Concentrations of PCE and TCE.dwg TAB:3 Date Exported: 05/15/23 - 7:31 by syi

APPENDIX D

INADVERTENT DISCOVERY PLAN

PLAN AND PROCEDURES FOR THE UNANTICIPATED DISCOVERY OF CULTURAL RESOURCES AND HUMAN SKELETAL REMAINS

PROJECT TITLE: TPU S17th St Court D/E

COUNTY WASHINGTON: Pierce County

Township: 20N Range: 3 E Section: SW 38

1. INTRODUCTION

The following Inadvertent Discovery Plan (IDP) outlines procedures to perform in the event of discovering archaeological materials or human remains, in accordance with state and federal laws.

2. RECOGNIZING CULTURAL RESOURCES

A cultural resource discovery could be prehistoric or historic. Examples include:

a. An accumulation of shell, burned rocks, or other food related materials.
b. Bones or small pieces of bone.
c. An area of charcoal or very dark stained soil with artifacts.
d. Stone tools or waste flakes (i.e. an arrowhead. or stone chips).
e. Clusters of tin cans or bottles, logging or agricultural equipment that appears to be older than 50 years.
f. Buried railroad tracks, decking, or other industrial materials.

When in doubt, assume the material is a cultural resource.

3. ON-SITE RESPONSIBILITIES

STEP 1: *Stop Work*. If any employee, contractor or subcontractor believes that he or she has uncovered a cultural resource at any point in the project, all work must stop immediately. Notify the appropriate party(s). Leave the surrounding area untouched, and provide a demarcation adequate to provide the total security, protection, and integrity of the discovery. The discovery location must be secured at all times by a temporary fence or other onsite security.

STEP 2: *Notify Archaeological Monitor or Licensed Archaeologist*. If there is an Archaeological Monitor for the project, notify that person. If there is a monitoring plan in place, the monitor will follow the outlined procedure.

STEP 3: *Notify the UW Project Manager* of this project or other applicable contacts:

Project Manager:
Name: Basel Kitmitto
Phone: 253.328.0302
Email: bkitmitto@cityoftacoma.org

Assigned Project Manager Alternate:
Name: Darius Thompson
Phone: 253.573.2410
Email: dthompson@cityoftacoma.org

The Project Manager or applicable staff will make all calls and necessary notifications. **If human remains are encountered**, treat them with dignity and respect at all times. Cover the remains with a tarp or other materials (not soil or rocks) for temporary protection and to shield them from being photographed. **Do not call 911 or speak with the media. Do not take pictures unless directed to do so by DAHP. See Section 5.**

4. FURTHER CONTACTS AND CONSULTATION

A. **Project Manager's Responsibilities**:

- *Protect Find*: The Project Manager is responsible for taking appropriate steps to protect the discovery site. All work will stop immediately in a surrounding area adequate to provide for the complete security of location, protection, and integrity of the resource. Vehicles, equipment, and unauthorized personnel will not be permitted to traverse the discovery site. Work in the immediate area will not resume until treatment of the discovery has been completed following provisions for treating archaeological/cultural material as set forth in this document.

- *Direct Construction Elsewhere on-Site*: The Project Manager may direct construction away from cultural resources to work in other areas prior to contacting the concerned parties.

- *Contact Senior Staff*: If the Senior Staff person has not yet been contacted, the Project Manager must do so.

B. **Senior Staff Responsibilities**:

- *Identify Find*: The Senior Staff (or a delegated Cultural Resource Specialist), will ensure that a qualified professional archaeologist examines the area to determine if there is an archaeological find.

    - If it is determined not to be of archaeological, historical, or human remains, work may proceed with no further delay.

    - If it is determined to be an archaeological find, the Senior Staff or Cultural Resource Specialist will continue with all notifications.

- If the find may be human remains or funerary objects, the Senior Staff or Cultural Resource Specialist will ensure that a qualified physical anthropologist examines the find. **If it is determined to be human remains, the procedure described in Section 5 will be followed.**

- *Notify DAHP*: The Senior Staff (or a delegated Cultural Resource Specialist) will contact the involved federal agencies (if any) and the Washington Department of Archaeology and Historic Preservation (DAHP).

- *Notify Tribes*: If the discovery may be of interest to Native American Tribes, the DAHP and Ecology Supervisor or Coordinator will coordinate with the interested and/or affected tribes.

Department of Archaeology and Physical Anthropologist Contacts:

Rob Whitlam, Ph.D. Archaeologist 360-890-2615 rob.whitlam@dahp.wa.gov	Dr. Guy Tasa State Physical Anthropologist 360-790-1633 guy.tasa@dahp.wa.gov

The DAHP will contact the interested and affected Tribes for a specific project.

Tribes consulted on this project are:

Tribe: Puyallup of Tribe of Indians	Tribe: Nisqually Indian Tribe
Name: Brandon Reynon	Name: Jackie Wall & Annette Bullchild
Title: Cultural Resources	Title: THPO
Phone: 253-573-7986	Phone: 360-528-5221 Ext: 2180 or 1106
Email: brandon.reynon@puyalluptribe.com	Email: Wall.jackie@nisqually-nsn.gov; Bullchild.annette@nisqually-nsn.gov
Tribe: Other Tribes as necessary	Tribe: Other Tribes as necessary
Name:	Name:
Title:	Title:
Phone:	Phone:
Email:	Email:

Further Activities

- Archaeological discoveries will be documented as described in Section 6.
- Construction in the discovery area may resume as described in Section 7.

5. SPECIAL PROCEDURES FOR THE DISCOVERY OF HUMAN SKELETAL MATERIAL

Any human skeletal remains, regardless of antiquity or ethnic origin, will at all times be treated with dignity and respect. Do not take photographs by any means, unless you are pre-approved to do so.
If the project occurs on federal lands or receives federal funding the provisions of the Native American Graves Protection and Repatriation Act of 1990 apply, and the responsible federal agency will follow its provisions. Note that state highways that cross federal lands are on an easement and are not owned by the state.

If the project occurs on non-federal lands, the Project Manager will comply with applicable state and federal laws, and the following procedure:

A. **In all cases you must notify a law enforcement agency or Medical Examiner/Coroner's Office**:

   In addition to the actions described in Sections 3 and 4, the Project Manager will immediately notify the local law enforcement agency or medical examiner/coroner's office.

   The Medical Examiner/Coroner (with assistance of law enforcement personnel) will determine if the remains are human, whether the discovery site constitutes a crime scene, and will then notify DAHP.

   Enter contact information below:

Pierce County Medical Examiner Karen Cline-Parhamovich, Chief Medical Examiner 253.798.6494	Tacoma Police Department Non-emergency: 253.287.4455

B. **Participate in Consultation**:

   Per RCW 27.44.055, RCW 68.50, and RCW 68.60, DAHP will have jurisdiction over non-forensic human remains.

C. **Further Activities**:
   - Documentation of human skeletal remains and funerary objects will be agreed upon through the consultation process described in RCW 27.44.055, RCW 68.50, and RCW 68.60.
   - When consultation and documentation activities are complete, construction in the discovery area may resume as described in Section 7.

6. DOCUMENTATION OF ARCHAEOLOGICAL MATERIALS

Archaeological deposits discovered during construction will be assumed eligible for inclusion in the National Register of Historic Places under Criterion D until a formal Determination of Eligibility is made.

Project staff will ensure the proper documentation and field assessment will be made of any discovered cultural resources in cooperation with all parties: the federal agencies (if any), DAHP, Ecology, affected tribes, and a contracted consultant (if any).

All prehistoric and historic cultural material discovered during project construction will be recorded by a professional archaeologist on a cultural resource site or isolate form using standard and approved techniques. Site overviews, features, and artifacts will be photographed; stratigraphic profiles and soil/sediment descriptions will be prepared for minimal subsurface exposures. Discovery locations will be documented on scaled site plans and site location maps.

Cultural features, horizons and artifacts detected in buried sediments may require further evaluation using hand-dug test units. Units may be dug in controlled fashion to expose features, collect samples from undisturbed contexts, or to interpret complex stratigraphy. A test excavation unit or small trench might also be used to determine if an intact occupation surface is present. Test units will be used only when necessary to gather information on the nature, extent, and integrity of subsurface cultural deposits to evaluate the site's significance. Excavations will be conducted using state-of-the-art techniques for controlling provenience, and the chronology of ownership, custody and location recorded with precision.

Spatial information, depth of excavation levels, natural and cultural stratigraphy, presence or absence of cultural material, and depth to sterile soil, regolith, or bedrock will be recorded for each probe on a standard form. Test excavation units will be recorded on unit-level forms, which include plan maps for each excavated level, and material type, number, and vertical provenience (depth below surface and stratum association where applicable) for all artifacts recovered from the level. A stratigraphic profile will be drawn for at least one wall of each test excavation unit.

Sediments excavated for purposes of cultural resources investigation will be screened through 1/8-inch mesh, unless soil conditions warrant ¼-inch mesh.

All prehistoric and historic artifacts collected from the surface and from probes and excavation units will be analyzed, catalogued, and temporarily curated. Ultimate disposition of cultural materials will be determined in consultation with the federal agencies (if any), DAHP and the affected tribes.

Within 90 days of concluding fieldwork, a technical report describing any and all monitoring and resultant archaeological excavations will be provided to the Project Manager, who will forward the report for review and delivery to DAHP, the federal agencies (if any), and the affected tribe(s).

If assessment activity exposes human remains (burials, isolated teeth, or bones), the process described in Section 5 will be followed.

7. PROCEEDING WITH WORK

Work outside the discovery location may continue while documentation and assessment of the cultural resources proceed. A professional archaeologist must determine the boundaries of the discovery location. In consultation with DAHP and any affected tribes, the Project Manager will determine the appropriate level of documentation and treatment of the resource. If there is a federal nexus, Section 106 consultation and associated federal laws will make the final determinations about treatment and documentation.

Work may continue at the discovery location only after the process outlined in this plan is followed and the Project Manager, DAHP, any affected tribes (and the federal agencies, if any) determine that compliance with state and federal law is complete.

8. RECIPIENT/PROJECT PARTNER RESPONSIBILITY

The IDP must be immediately available onsite, be implemented to address any discovery, and be available by request by any party. The Project Manager and Project Team will review the IDP during a project kickoff or pre-construction meeting.

We recommend that you print images in color for accuracy.

Implement the IDP / UDP if …

You see chipped stone artifacts.

- Glass-like material
- Angular
- “Unusual” material for area
- “Unusual” shape
- Regularity of flaking
- Variability of size

Implement the IDP / UDP if …

You see ground or pecked stone artifacts.

- Striations or scratching
- Unusual or unnatural shapes
- Unusual stone
- Etching
- Perforations
- Pecking
- Regularity in modifications
- Variability of size, function, and complexity

Implement the IDP / UDP if …

You see bone or shell artifacts.

- Often smooth
- Unusual shape
- Carved
- Often pointed if used as a tool
- Often wedge shaped like a "shoehorn"

Bone Awls from Oregon and Bone Wedge from California

Implement the IDP / UDP if …

You see bone or shell artifacts.

- Often smooth
- Unusual shape
- Perforated
- Variability of size

Implement the IDP / UDP if …

You see fiber or wood artifacts.

- Wet environments needed for preservation
- Variability of size, function, and complexity
- Rare

Artifacts from Mud Bay, Olympia, Washington

Implement the IDP / UDP if …

You see historic period artifacts.

Artifacts from Downtown Seattle, Alaskan Way Viaduct (Upper Left and Lower) and Unknown Site (Upper Right)

Implement the IDP / UDP if …

You see strange, different or interesting looking dirt, rocks, or

- Human activities leave traces in the ground that may or may not have artifacts associated with them
- “Unusual” accumulations of rock (especially fire-cracked rock)
- “Unusual” shaped accumulations of rock (e.g., similar to a fire ring)
- Charcoal or charcoal-stained soils
- Oxidized or burnt-looking soils
- Accumulations of shell
- Accumulations of bones or artifacts
- Look for the “unusual” or out of place (e.g., rock piles or accumulations in areas with few rock)

Implement the IDP / UDP if …

You see strange, different or interesting looking dirt, rocks, or

- "Unusual" accumulations of rock (especially fire-cracked rock)
- "Unusual" shaped accumulations of rock (e.g., similar to a fire ring)
- Look for the "unusual" or out of place (e.g., rock piles or accumulations in areas with few rock)

Site on Muckleshoot Indian Reservation, near WSDOT ROW along SR 164

Implement the IDP / UDP if …

You see strange, different or interesting looking dirt, rocks, or

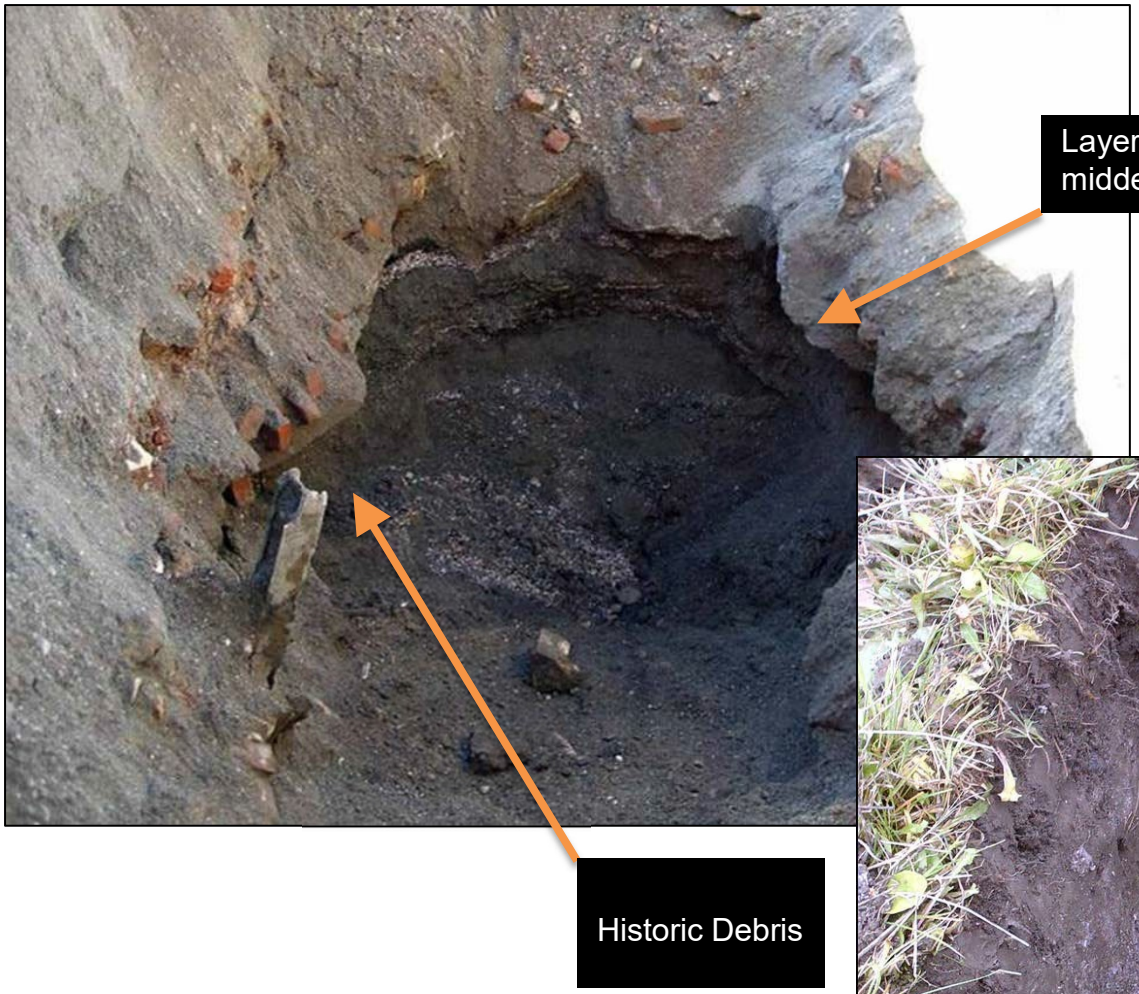

- Often have a layered or "layer cake" appearance
- Often associated with black or blackish soil
- Often have very crushed and compacted shells

Implement the IDP / UDP if …

You see historic foundations or buried structures.

APPENDIX E

PSE DESIGN PLAN SET

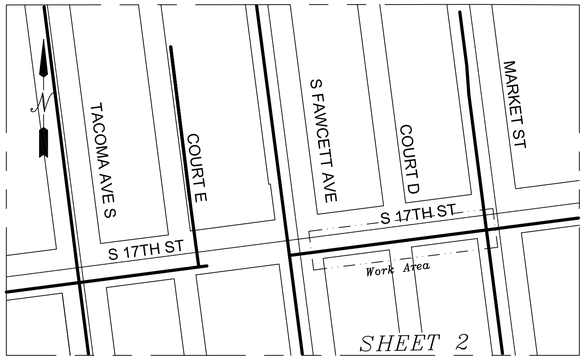

AREA PLAN
SCALE: NONE

CONSTRUCTION NOTE:

*PROPOSED NEW VALVES & CP BOXES NOT TO BE LOCATED WITH-IN ADA RAMPS.

*ABANDONED VALVE BOXES & CP WIRE BOXES TO BE REMOVED DURING CONSTRUCTION.

*ESM TO PROVIDE SURVEY

*HOT MIX TEMP RESTORATION

*MAINTAIN 5' HORIZONAL SEPARATION FROM WATER

STANDARD IP & LP GAS REPLACEMENT CONSTRUCTION NOTES

1. NOTIFY GAS CUSTOMERS, OR DISTRIBUTE FLYER #1443 A MINIMUM OF TWO WORKING DAYS PRIOR TO A PLANNED OUTAGE.
2. INSTALL ONE POUND ANODE FOR EVERY 1000' OF LOCATING WIRE. INSTALL ANODE AND TEST LEAD WIRES PER PSE GAS OPERATING STANDARD 2525.2300.
3. MAINTAIN CATHODIC PROTECTION FOR STEEL MAINS BY THE USE OF CONTINUITY BONDS OR OTHER MEANS DETERMINED BY THE PSE CORROSION ENGINEER PER PSE GAS OPERATING STANDARD 2600.1300.
4. INSTALL ANODES AND TEST LEAD WIRES AS REQUIRED PER PSE GAS FIELD PROCEDURES 4515.1000 AND 4515.1020 AND PSE GAS OPERATING STANDARD 2600.1200. TEST LEAD WIRES ARE REQUIRED ON ALL TRANSITION FITTINGS.
5. INSTALL CURB VALVE AT PROPERTY LINE OR 5/8" PE WHIP AT MAIN (AS REQUIRED) ON NEW AND EXISTING SERVICES PER PSE GAS OPERATING STANDARD 2550.1600.
6. REFER TO PSE GAS OPERATING STANDARD 2525.1700 FOR MAIN AND SERVICE COVER REQUIREMENTS.
7. MAINS AND SERVICES SHALL BE TESTED AND PURGED PER PSE GAS OPERATING STANDARDS 2525.3300 AND 2525.3400 AND PSE GAS FIELD PROCEDURE 4700.1500.
8. PROJECT MANAGER TO MAKE AN ACTIVE SERVICE RUN IMMEDIATELY PRIOR TO STARTING CONSTRUCTION.
9. INSTALL REPLACEMENT MAINS PER PSE GAS OPERATING STANDARD 2525.2100.
10. PLUG ENDS OF DEACTIVATED OR INSERTED MAINS AND SERVICES IN ACCORDANCE WITH PSE GAS OPERATING STANDARDS 2525.2100 AND 2525.3600.
11. REMOVE OR RENDER INOPERABLE DEACTIVATED VALVES ON CASING WHERE MPE PIPE IS INSERTED.
12. INSIDE METER SETS SHALL BE MOVED OUTSIDE WHENEVER POSSIBLE OR SET REGULATORS AND VENTS OUTSIDE PER PSE GAS OPERATING STANDARDS 2575.2300 AND 2550.1700.
13. REPLACE EXISTING ACTIVE SERVICES PER PSE GAS OPERATING STANDARDS 2525.2100 AND 2575.2300.
14. REPLACE ALL "NO RECORD" SERVICES AND 1-1/8" PE SERVICES INSTALLED PRIOR TO 1985.
15. ACTIVE SERVICES TO BE REPLACED DENOTED BY: ◄###►
16. MAINS AND SERVICES SHALL BE CONSTRUCTED IN ACCORDANCE WITH 2525.1200.
17. PIPE SQUEEZING SHALL BE DONE IN ACCORDANCE WITH GOS 2525.1200 AND GAS FIELD PROCEDURES 4700.1300 AND 4700.1310.
18. WHEN INSTALLING, DEACTIVATING, REPAIRING, OR OTHERWISE MODIFYING A PIPELINE THAT IS LOCATED WITHIN 200 FEET OF ANY ACTIVE REGULATING STATION, PRESSURE RELIEF AND LIMITING DEVICE, OR SINGLE SERVICE FARM TAP WHERE GAS SYSTEM ENGINEERING REVIEW AND APPROVAL IS REQUIRED PER GAS OPERATING STANDARDS. SEE REVIEW DOCUMENTS, PROVIDED BY ENGINEERING.
19. FIELD TO VERIFY THAT ALL PROPER SERVICE ACTIONS (FOLLOWING THE KEY TO SERVICE ACTION LEGEND) HAVE BEEN ACCOUNTED FOR PER THE "SERVICE CHECKLIST". IF A RISER IS FOUND IN THE FIELD AND WASN'T ACCOUNTED FOR, FIELD PERSONNEL SHALL CONFIRM WHETHER THE RISER IS AN ABANDONED OR IDLE RISER:
    - 19.1 IF IT IS AN ABANDONED RISER, CONTACT THE POINT DESK TO REQUEST GFR TO REMOVE IT.
    - 19.2 IF IT IS AN IDLE RISER, REPORT THE RISER TO THE PROJECT MANAGER SO THAT THE PROJECT MANAGER MAY CONFIRM WITH THE CUSTOMER WHETHER THEY WOULD LIKE TO KEEP THE SERVICE AND RISER. THE PROJECT MANAGER MAY INSTRUCT TO TEST AND TIE THE SERVICE IF THE CUSTOMER WANTS GAS OR DOESN'T PROVIDE PSE A RESPONSE IN A TIMELY MANNER.

STANDARD GAS CONSTRUCTION NOTES:

1. FIELD LOCATE ALL UNDERGROUND UTILITIES. EXCAVATOR TO CALL "ONE-CALL" TWO WORKING DAYS PRIOR TO CONSTRUCTION, IN WESTERN WASHINGTON CALL: 1-800-424-5555. OR CALL NATIONWIDE: 811
2. NOTIFY APPROPRIATE PERMITTING AGENCY PRIOR TO JOB START (SEE PERMIT REQUIREMENTS).
3. ALL CONSTRUCTION IS TO CONFORM TO PSE GAS OPERATING STANDARDS AND GAS FIELD PROCEDURES.
4. EROSION AND SEDIMENT CONTROL SHALL BE PER PSE STANDARD PRACTICE 0150.3200 TECHNIQUES FOR TEMPORARY EROSION AND SEDIMENT CONTROL AND ANY ADDITIONAL LOCAL JURISDICTION REQUIREMENTS.
5. NOTIFY PROPERTY OWNERS ADJACENT TO PROPOSED CONSTRUCTION ACTIVITIES A MINIMUM OF TWO WORKING DAYS PRIOR TO BEGINNING CONSTRUCTION. USE ISI TO DISTRIBUTE FLYERS IF JOB IS LARGE, OTHERWISE HAND DELIVER FLYERS BE SURE TO INCLUDE THE LIST OF FREQUENTLY ASKED QUESTIONS AND INFORMATION ABOUT THE OPPORTUNITY TO PURCHASE AN EXCESS FLOW VALVE WHEN THEIR SERVICE IS INSTALLED OR REPLACED PER GAS OPERATING STANDARD 2550.1600. ALLOW ADEQUATE TIME FOR CUSTOMER DECISION AND RESPONSE.
6. ANY CHANGE IN ROUTE, PIPE SIZE/TYPE, TIE-IN METHOD OR ADDITIONAL MAIN FOOTAGE MUST BE APPROVED BY THE APPROPRIATE PSE ENGINEER OR PSE REPRESENTATIVE.
7. COMPLETE "PIPE CONDITION REPORT" ON ALL METALLIC PSE FACILITIES. CHECK BOX ON REPORT FOR WIRE BOX (TEST LEAD) INSTALLATION.
8. PIPELINE MARKERS AND WARNING SIGNS SHALL BE INSTALLED AND RECORDED BY THE CONTRACTOR PER PSE GAS OPERATING STANDARD 2525.2500.
9. INSTALL MAIN VALVES OUT OF TRAFFIC WHERE POSSIBLE. VALVE MARKERS SHALL BE INSTALLED AND RECORDED BY THE CONTRACTOR PER PSE GAS OPERATING STANDARD 2525.2600 FOR ALL HP VALVES IF THE LOCATION IS NOT READILY ACCESSIBLE, AND FOR ALL VALVES WHERE PERSISTENT SNOWFALL MAY OBSCURE THE VALVE BOX.
10. TO PREVENT ACCIDENTAL OVERPRESSURE OF ADJOINING SYSTEMS, NO TWO MAINS SHALL BE CONNECTED EXCEPT AS SHOWN ON THIS DESIGN UNLESS APPROVED BY APPROPRIATE PSE ENGINEER OR PSE REPRESENTATIVE.
11. SYSTEM MAOP DENOTED BY: SYSTEM MAOP = 35 PSIG
12. GAUGE AND MONITOR USE OF ALL STOPPERS TO ENSURE ADEQUATE FEED.
13. RESTORE ALL DRIVEWAYS SUBJECT TO OPEN CUT TO ORIGINAL OR BETTER CONDITION.
14. PURGE POINTS TO BE INSTALLED PER PSE GAS OPERATING STANDARDS 2525.3400.
15. MAINS AND SERVICES SHALL BE TESTED AND PURGED PER PSE GAS OPERATING STANDARDS 2525.3300 AND 2525.3400.
16. IF METALLIC PIPE IS INVOLVED, COORDINATE INSTALLATION WITH CP TECH. _____, PHONE_____.
17. NOTE ALL ACTUAL FOOTAGE, LOCATION AND MATERIAL CHANGES ON THE AS-BUILT IN RED. (") DENOTES FOOTAGE BETWEEN FITTINGS.
18. EXCESS FLOW VALVE TO BE INSTALLED ON ALL NEW RESIDENTIAL SERVICES PER GOS 2500.2200. (RECORD ALL INFORMATION ON D-4 CARD)

SAP BATCH YEAR & FOOTAGE

SIZE OF RETIRED MAIN	MATERIAL RETIRED	ORIGINAL JOB	ORIGINAL YEAR	PROPOSED LENGTH OF RETIREMENT	ACTUAL LENGTH OF RETIREMENT
2"	STW	71–936	1971	278'	

KEY TO SERVICE ACTION

T&T ###	TEST & TIE SERVICE
◄###►	REPLACE COMPLETE SVC
T&T [###]	REPLACE STUB AND TEST & TIE EXTENSION
[###]	INSTALL NEW SERVICE ADDRESS
C&C ###	CUT & CAP SERVICE
RWM ###	RETIRE WITH MAIN (RETIRE ABOVE GROUND RISER)

LEGEND

- Detail Number (1/2)
- Sheet Location of Detail (a dash if on same sheet as the Plot Plan)
- Section Letter (A/2)
- Sheet Location of Section

Backfill for Direct Bury - The final backfill may be soil-based select material or native soil, but free of construction debris and shall not contain rocks larger than **10"**-in. diameter to prevent impedence of gas system maintenance.

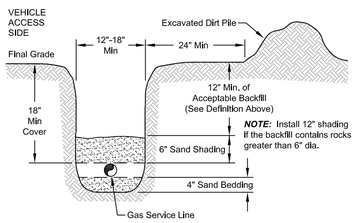

TYPICAL GAS SERVICE LINE TRENCH DETAIL
Not to scale — RESIDENTIAL

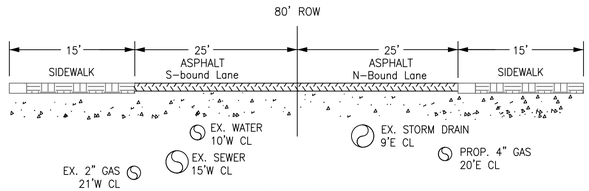

MARKET STREET
ROADWAY CROSS-SECTION
N.T.S.

Backfill for Direct Bury - The final backfill may be soil-based select material or native soil, but free of construction debris and shall not contain rocks larger than **10"**-in. diameter to prevent impedence of gas system maintenance.

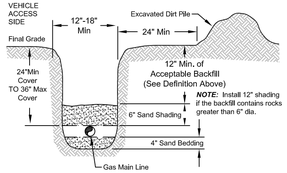

TYPICAL COMMERCIAL GAS MAINLINE TRENCH DETAIL
Not to scale — COMMERCIAL

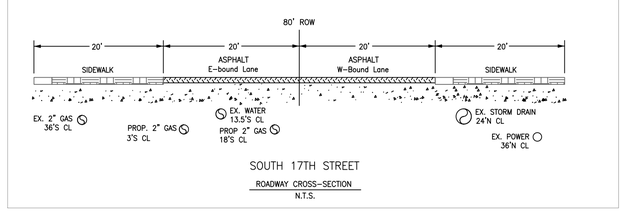

SOUTH 17TH STREET
ROADWAY CROSS-SECTION
N.T.S.

HOLE HOG TABLE

CALLOUT		LOCATION	DEPTH	LENGTH
BP1	START			
BP2	END			
BP3	START			
BP4	END			
BP5	START			
BP6	END			
BP7	START			
BP8	END			
BP9	START			
BP10	END			
BP11	START			
BP12	END			
BP13	START			
BP14	END			
BP15	START			
BP16	END			
BP17	START			
BP18	END			
BP19	START			
BP20	END			

E.O.C.

END OF CONDUIT No.	LOCATION (N-S-E-W)
C1	___'__ C/L
C2	___'__ C/L
C3	___'__ C/L
C4	___'__ C/L
C5	___'__ C/L
C6	___'__ C/L
C7	___'__ C/L
C8	___'__ C/L
C9	___'__ C/L
C10	___'__ C/L

CP NOTES:

This job will retire TS-076293 of IC-037056 (currently bonded with IC-037016) and reduce overall system footage by approximately 250'. The wire box installed at S Fawcett Ave and S 17 St will be a new test site. Record x,y meaussurements and a PSP. Inform me via email after job completion so I can update SAP. jbatin

NOTIFY : John Batinovich
CORRISION TECH. @ 253-405-4951

CP APPROVAL
8/15/23

SAND BEDDING & SHADING NOTE FOR GAS MAINS :

1. BEDDING SHALL BE NO LESS THAN 4" OF CLEAN SAND.
2. INITIAL BACKFILL SHALL CONSIST OF 6" OF CLEAN SAND IF REMAINING BACKFILL MATERIAL HAS NO ROCK OVER 6" IN DIAMETER.
3. INITIAL BACKFILL SHALL CONSIST OF 12" OF CLEAN SAND IF REMAINING BACKFILL MATERIAL CONTAINS ROCKS BETWEEN 6" AND 10" IN DIAMETER.
4. IF THE REMAINING BACKFILL MATERIAL CONTAINS ROCK LARGER THAN 10" IN DIAMETER, IT MUST BE SCREENED OR SUITABLE MATERIAL MUST BE IMPORTED.

FITTER'S CHECKLIST (CHECK BOX TO CONFIRM COMPLETION)

- ☐ Inspected Steel and PE pipe per GOS 2450.1400 and 2450.1500
- ☐ Reviewed and complied with all construction notes.
- ☐ Recorded all required Information on the as-built per GOS 2500.1700.
- ☐ Completed post Installation Inspection per GOS 2525.1200 and 2525.2700.
- ☐ Left the work area in a clean and safe condition.

Foreman's Signature_____

Foreman's Name (printed) _____

Company: _____ Date _____

4680 06/11

GAS MAIN INSTALLATION/RETIREMENT

Type/Work	Pipe Size	Type	Est Length	Act Lgth	Manufacturer
INSTALL	2"	PE	280'		
RETIRE	2"	STW	278'		

Verify Testing Requirements, Chart vs Gauge
GOS 2525.3300 sec. 5, Table 5-1 and sec. 5.5

GAS MAIN PRESSURE & TESTING

TYPE TEST	☐ SOAP	☐ AIR	☐ NITROGEN	☐ WATER
DATE ON	/ /	START TIME		TESTED BY
DATE OFF	/ /	STOP TIME		
PRESSURE		TEST RESULTS	☐ P ☐ F	
TYPE TEST	☐ SOAP	☐ AIR	☐ NITROGEN	☐ WATER
DATE ON	/ /	START TIME		TESTED BY
DATE OFF	/ /	STOP TIME		
PRESSURE		TEST RESULTS	☐ P ☐ F	
☐ TESTED BY PSE PRESSURE CONTROL, SEE FORM 1928				
DESIGN PRESS	60	SYS MAOP	35	

2023 02/18

GASSED UP PIPELINE

DATE	FOREMAN'S NAME	PIPE SEGMENT

109150097

PROJECT PHASE		Notification #	Order #
GAS	SAP Superior	11937729	109150097
	Service/Meter	11951089	109150750
	Service/Meter	N/A	N/A
	Service/Meter	N/A	N/A
	Service/Meter	N/A	N/A
	Ind. Service	N/A	N/A
	Ind. MSA	N/A	N/A
	Dis. Reg. / FT	N/A	N/A
	HP Svc/MSA	N/A	N/A
	Svc. Retirement	N/A	108644935
	Main Retirement	N/A	108644934

Project Manager Contact Information:
Manager: AMBER UHLS
Cell Phone: 425 495-1062
E-Mail: amber.uhls@pse.com

"Locates Required" Yes ☐ No ☐
"Flagging Required" Yes ☐ No ☐

Owner / Developer Contact Info
CITY OF TACOMA - PI
ATTN: BASEL KIMITTO 253 328-0302 office

For contacts below dial 1-888-CALL PSE (225-5773)

CALL 811 AT LEAST 2 BUSINESS DAYS BEFORE YOU DIG

THIS SKETCH NOT TO BE RELIED UPON FOR EXACT LOCATION OF EXISTING FACILITIES

REAL ESTATE/EASEMENT	PERMIT
NA	TACOMA

REV#	DATE	BY	DESCRIPTION
3			Add Revision bubbles to resubmit
2	12/18/23	JKing	for permit
1	12/15/23	JKing	Main & Details revised

FUNCTION	CONTACT	PHONE NO	DATE
PROJECT MGR	Amber Uhls	425 495-1062	
ENGR - GAS	N/A	N/A	N/A
DRAWN BY JK	Julie King	425 516-5439	8/23/23
CHECKED BY PdG	Peter de Graaf	253 579-5076	9/1/23
APPROVED BY AU	Amber Uhls	425 495-1062	12/18/23
CP APPROVAL	J Batinovich	253 405-4951	8/15/23
PC APPROVAL	NA	NA	NA
MAPPING			

COUNTY	Emer Sect	GAS WK CTR
PIERCE	158	CSPPGPM
1/4 SEC	OP MAP	PLAT MAP
SW 4 20-03 E	240.056	241.060

JOINT FACILITIES ARRANGEMENTS

UTILITIES	N/A	N/A	N/A	N/A
CONTACT	N/A	N/A	N/A	N/A
PHONE#	N/A	N/A	N/A	N/A

PUGET SOUND ENERGY

PWR-01216 S 17th & FAWCETT ST. TACOMA PI
RELOCATE / REPLACE 2" STW MAIN
SO 17TH ST & FAWCETT AVE ., TACOMA,WA.98402

DESIGNED BY PSE

SAP Sup Order Nbr 109150097
Drawing Number N/A
SCALE NTS — PAGE 1 of 2

Dec 18, 2023 – 12:25pm J:\Gas_Southwest\SW Gas C&SP Proj – PM JOBS\Julie\PI JOBS\109150097\Redesign 9 19 23 12 15 23\ 12 15 23 Final Redesign 109150097_.dwg

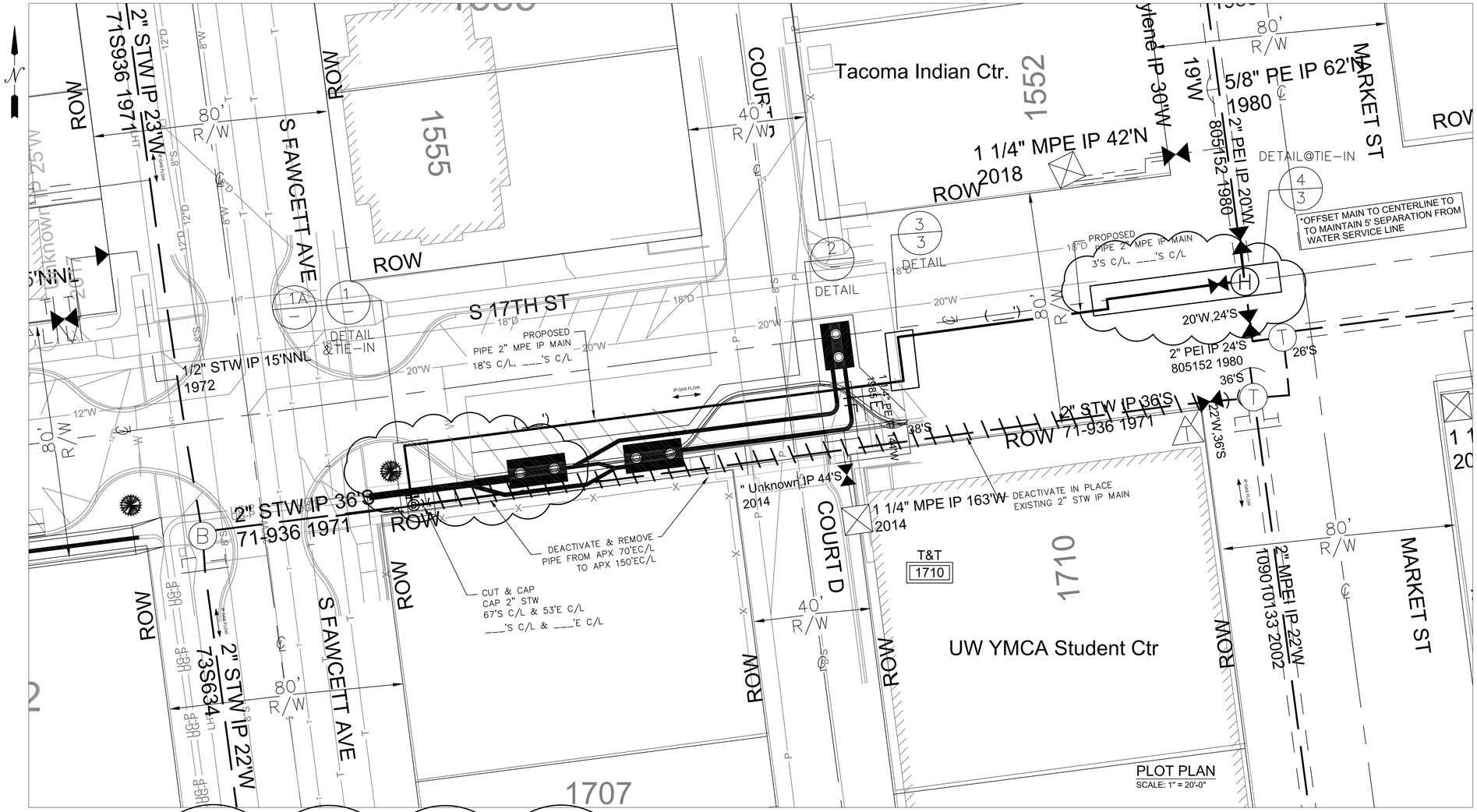

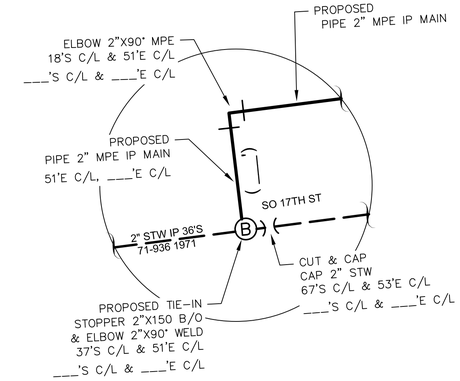

1A DETAIL & TIE-IN
Scale: None

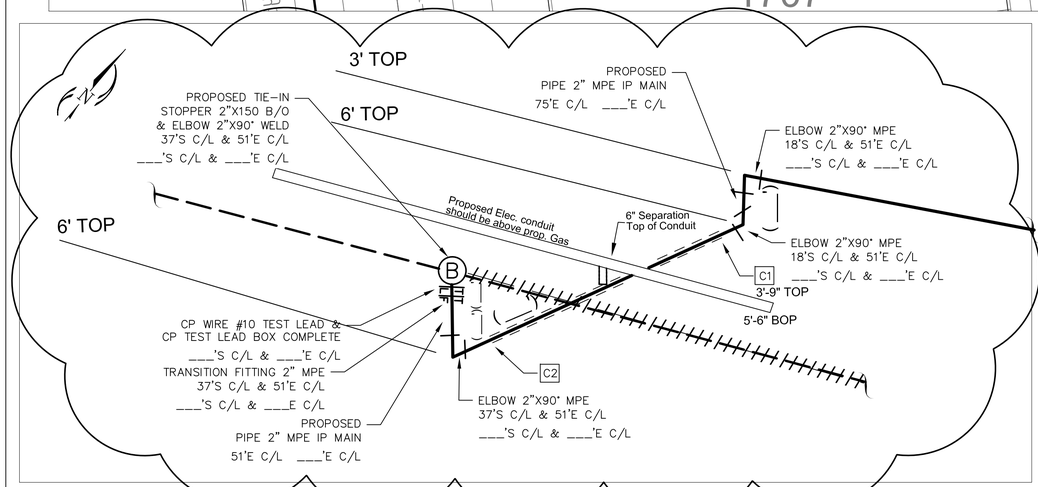

1 DETAIL & TIE-IN
Scale: None

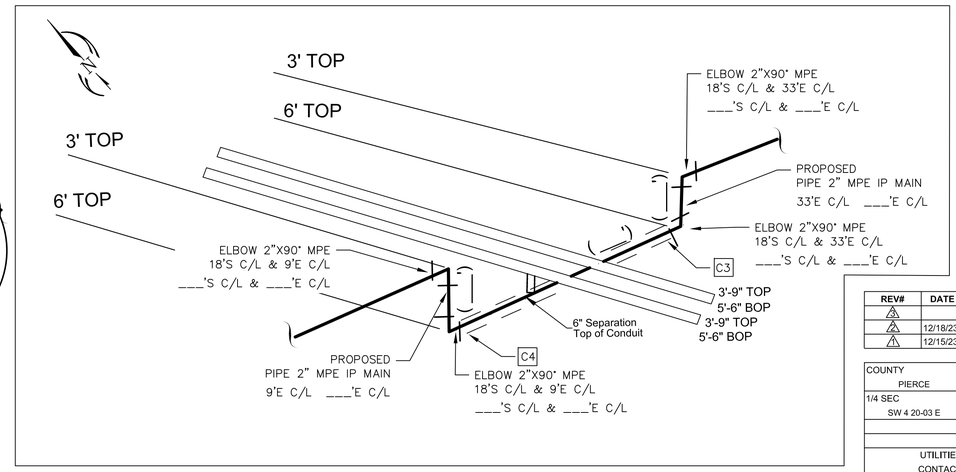

2 DETAIL
Scale: None

FITTER'S CHECKLIST (CHECK BOX TO CONFIRM COMPLETION)

- ☐ Inspected Steel and PE pipe per GOS 2450.1400 and 2450.1500
- ☐ Reviewed and complied with all construction notes.
- ☐ Recorded all required information on the as-built per GOS 2500.1700.
- ☐ Completed post installation inspection per GOS 2525.1200 and 2525.2700.
- ☐ Left the work area in a clean and safe condition.

Foreman's Signature _____

Foreman's Name (printed) _____

Company: _____ Date _____

4680 06/11

REAL ESTATE/EASEMENT	PERMIT
NA	TACOMA

REV#	DATE	BY	DESCRIPTION	FUNCTION	CONTACT	PHONE NO	DATE
3			Add Revision bubbles to resubmit	PROJECT MGR	Amber Uhls	425 495-1062	
2	12/18/23	JKing	for permit	ENGR - GAS	N/A	N/A	N/A
1	12/15/23	JKing	Main & Details revised	DRAWN BY JK	Julie King	425 516-5439	8/23/23
				CHECKED BY PDG	Peter de Graaf	253 579-5076	9/1/23
				APPROVED BY AU	Amber Uhls	425 495-1062	12/18/23
				CP APPROVAL	J Batinovich	253 405-4951	8/15/23
				PC APPROVAL	NA	NA	NA
				MAPPING			

COUNTY	Emer Sect	GAS WK CTR
PIERCE	158	CSPPGPM

1/4 SEC	OP MAP	PLAT MAP
SW 4 20-03 E	240,056	241,060

JOINT FACILITIES ARRANGEMENTS

UTILITIES	N/A	N/A	N/A	N/A
CONTACT	N/A	N/A	N/A	N/A
PHONE#	N/A	N/A	N/A	N/A

PSE PUGET SOUND ENERGY

DESIGNED BY PSE

PWR-01216 S 17th & FAWCETT ST. TACOMA PI

RELOCATE / REPLACE 2" STW MAIN

SO 17TH ST & FAWCETT AVE ., TACOMA,WA.98402

SAP Sup Order Nbr 109150097

Drawing Number N/A

SCALE 1"= 20' | PAGE 2 of 3

Dec 18, 2023 – 12:25pm J:\Gas_Southwest\SW Gas C&SP Proj – PM JOBS\Julie\PI JOBS\109150097\Redesign 9 19 23 12 15 23\ 12 15 23 Final Redesign 109150097_.dwg

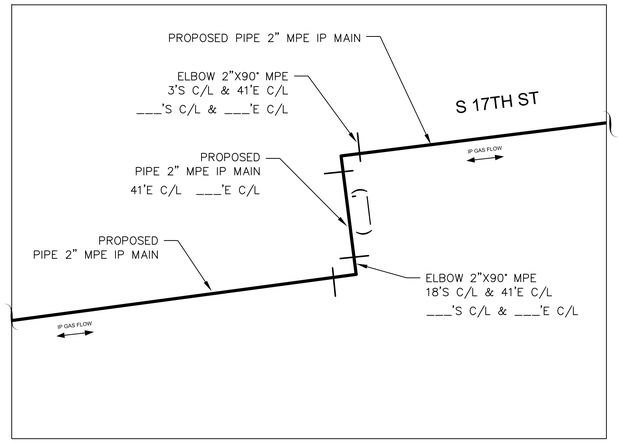

3 DETAIL
Scale: None

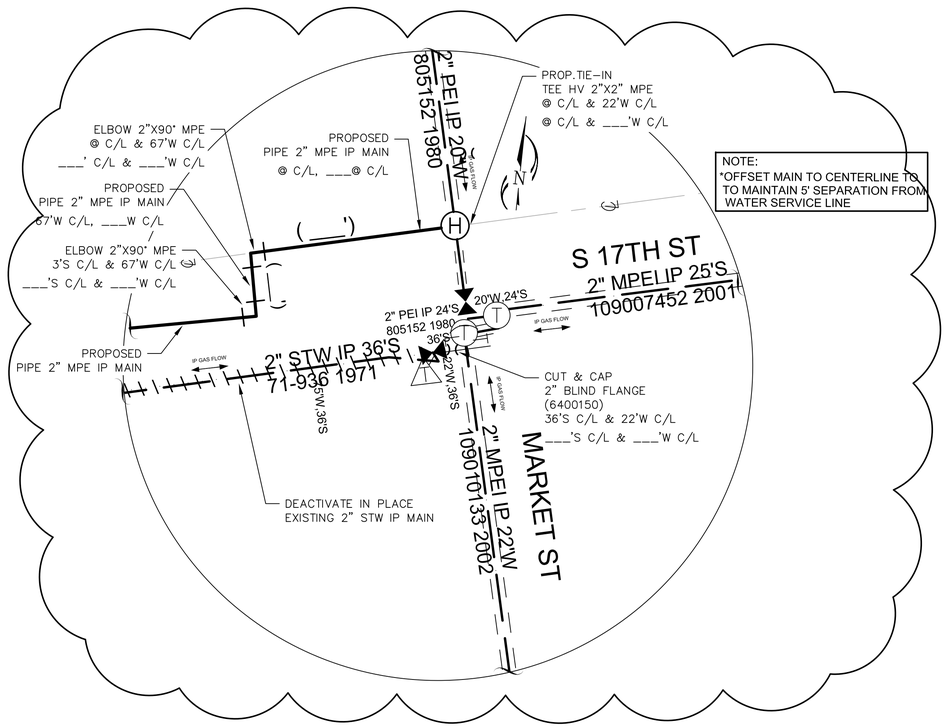

4 DETAIL @ TIE-IN
Scale: None

REV#	DATE	BY	DESCRIPTION	FUNCTION	CONTACT	PHONE NO	DATE
3			Add Revision bubbles to resubmit	PROJECT MGR	Amber Uhls	425 495-1062	
2	12/18/23	JKing	for permit	ENGR - GAS	N/A	N/A	N/A
1	12/15/23	JKing	Main & Details revised	DRAWN BY JK	Julie King	425 516-5439	8/23/23
				CHECKED BY PdG	Peter de Graaf	253 579-5076	9/1/23
				APPROVED BY AU	Amber Uhls	425 495-1062	12/18/23
				CP APPROVAL	J Batinovich	253 405-4951	8/15/23
				PC APPROVAL	NA	NA	NA
				MAPPING			

REAL ESTATE/EASEMENT: NA
PERMIT: TACOMA

COUNTY	Emer Sect	GAS WK CTR
PIERCE	158	CSPPGPM
1/4 SEC	OP MAP	PLAT MAP
SW 4 20-03 E	240,056	241,060

JOINT FACILITIES ARRANGEMENTS

UTILITIES	N/A	N/A	N/A	N/A
CONTACT	N/A	N/A	N/A	N/A
PHONE#	N/A	N/A	N/A	N/A

FITTER'S CHECKLIST (CHECK BOX TO CONFIRM COMPLETION)

- ☐ Inspected Steel and PE pipe per GOS 2450.1400 and 2450.1500
- ☐ Reviewed and complied with all construction notes.
- ☐ Recorded all required information on the as-built per GOS 2500.1700.
- ☐ Completed post installation inspection per GOS 2525.1200 and 2525.2700.
- ☐ Left the work area in a clean and safe condition.

Foreman's Signature_____

Foreman's Name (printed) _____

Company: _____ Date _____

4680 06/11

PUGET SOUND ENERGY

PWR-01216 S 17th & FAWCETT ST. TACOMA PI

RELOCATE / REPLACE 2" STW MAIN

SO 17TH ST & FAWCETT AVE ., TACOMA,WA.98402

DESIGNED BY PSE

SAP Sup Order Nbr 109150097

Drawing Number N/A

SCALE NTS

PAGE 3 of 3

Dec 18, 2023 – 12:26pm J:\Gas_Southwest\SW Gas C&SP Proj – PM JOBS\Julie\PI JOBS\109150097\Redesign 9 19 23 12 15 23\ 12 15 23 Final Redesign 109150097_.dwg

P A R T III

CITY OF TACOMA

EQUITY IN CONTRACTING PROGRAM

EIC REQUIREMENT FORM

EQUITY IN CONTRACTING REQUIREMENTS & PROCEDURES:

All bidders must complete and submit with their bid the following solicitation form contained in the bid submittal package:

City of Tacoma – EIC Utilization Form

IMPORTANT NOTE:

It is the bidder's responsibility to ensure that the subcontractor(s) listed on the EIC Utilization Form are currently certified by the State of Washington's Office of Minority and Women Business Enterprises (OMWBE) at the time of bid opening. This may be verified by contacting the EIC Office at 253-591-5075 between 8 AM and 5 PM, Monday through Friday or the OMWBE Office at (866) 208-1064. Please refer to the City of Tacoma EIC code.

EQUITY IN CONTRACTING REQUIREMENTS

Minority Business Enterprise Requirement	Women Business Enterprise Requirement	Small Business Enterprise Requirement
8%	**2%**	**8%**

A list of EIC-eligible companies is available on the following web site addresses:

www.omwbe.diversitycompliance.com*

MATERIAL MISSTATEMENTS CONCERNING COMPLETED ACTIONS BY THE BIDDER IN ANY SWORN STATEMENT OR FAILURE TO MEET COMMITMENTS AS INDICATED ON THE EIC UTILIZATION FORM MAY RENDER THE BIDDER IN DEFAULT OF CITY ORDINANCE 1.07

CCD/EIC: PWR-01216-09-01
Date of Record: 01/10/2024
Project Spec#: PW23-0090F
Project Title: TPU S17th St Court D/E

***For the OMWBE list, be sure to look for businesses in Pierce, King, Lewis, Mason, Grays Harbor, Thurston, or any counties adjacent to the county in which the work is performed per 1.07.050(2)(b-c). Contact the EIC Office if you have any questions.**

City of Tacoma
Community & Economic Development
747 Market Street, Rm 900
Tacoma WA 98402

CITY OF TACOMA EQUITY IN CONTRACTING (EIC) PROGRAM

Bidders Special Instructions

As part of the City of Tacoma's ongoing work to address past disparities and to increase the City's contracting with and utilization of historically underutilized businesses, the Equity in Contracting (EIC) Program places requirements on City contracts for utilization of businesses certified by the Washington State Office of Minority and Women's Business Enterprise (OMWBE) and approved by the Equity in Contracting Program ("Certified Businesses"). The EIC Program also provides guidance and technical assistance to Certified Businesses who are interested in providing supplies, services and public works to the City of Tacoma.

The EIC Program requirements are contained in Tacoma Municipal Code Chapter 1.07.

Contractors bidding on City of Tacoma projects are required to meet the stated EIC requirements. Bids will be evaluated on an individual basis to determine EIC compliance. **A contractor who fails to meet the stated EIC requirements will be considered non-responsible.** Bidders are also subject to the City's Equal Employment Opportunity policies prohibiting discrimination.

The stated EIC requirements may be met by the contractor or by identified subcontractors. All EIC Requirements may be met by using MBEs, WBEs, DBEs or SBEs from the OMWBE certified list (OMWBE website). It is the bidder's responsibility to ensure that their firm or identified subcontractors are certified by OMWBE and approved by the City of Tacoma EIC Program **at the time of bid submittal**. Business certification may be verified by contacting the EIC Office*.

For the OMWBE list, be sure to look for businesses in Pierce, King, Lewis, Mason, Grays Harbor, Thurston, or any counties adjacent to the county in which the work is performed per 1.07.050(2)(b-c). Contact the EIC Office if you have any questions.*

The Equity in Contracting (EIC) forms included in these bid documents must be fully completed (including attachments) and included with bid submittals. Failure to include the required forms will result in the submittal being rejected as nonresponsive.

Post-Award Important Information

For all contracts that have requirements related to the EIC policy, the City of Tacoma is utilizing a cloud-based software system:

B2Gnow - Contractors and subcontractors must report payment information in the B2Gnow System on a monthly basis. The EIC Staff will monitor/audit that retainage is paid by the prime contractor to the subcontractor(s) within 10 [working] days after the subcontractors' work is satisfactorily completed. This will be monitored/audited using the B2Gnow System.

The system is monitored/audited by EIC staff to ensure contract compliance, proactively identify potential issues, and track contract progress.

***EIC STAFF Contact Information**

For questions regarding Certifications, EIC Compliance and B2GNow support, contact EIC Staff:

- **Call EIC Office** at (253) 591-5630 or (253) 591-5826
- **Email EIC Office** at EICOffice@cityoftacoma.org

City of Tacoma
Community & Economic Development
Office of Equity in Contracting
747 Market Street, Rm 900
Tacoma WA 98402
253-591-5826
Email: EICOffice@cityoftacoma.org

EQUITY IN CONTRACTING UTILIZATION FORM

This form is to document **only** the contractors, subcontractors, material suppliers or other types of firms that are intended to be used to meet the stated EIC requirements for the contract awarded from this solicitation. This information will be used to determine contract award. Additional forms may be used if needed.

- You must include this form with your bid submittal in order for your bid to be responsive.
- Prime contractors are **required** to solicit bids from Businesses that are "Certified" by the Office of Minority and Women's Business Enterprises (OMWBE) www.omwbe.wa.gov as a MBE, WBE, and SBE to be know as "Certified Business".
- It is the Prime contractor's responsibility to verify the certification status of the business(s) intended to be utilized prior to the submittal deadline.

Bidder's Name:_____

Address:_____ City/State/Zip: _____

Spec. No. _____ Base Bid * $_____ **Complete business names and phone numbers are required to verify your usage of Certified Businesses**

a. Business Name and Certification Number(s)	**b.** MBE, WBE, or SBE (Write all that apply)	**c.** NAICS code(s)	**d.** Contractor Bid Amount (100%)	**e.** Material Supplier Bid Amount (20%)	**f.** Estimated MBE Usage Dollar Amount	**g.** Estimated WBE Usage Dollar Amount	**h.** Estimated SBE Usage Dollar Amount
i. MBE Utilization %	**j.** WBE Utilization %		**k.** SBE Utilization %				

By signing and submitting this form the bidder certifies that the OMWBE Certified Business(s) listed will be used on this project including all applicable change orders.

_____ _____ _____

Type or Print Name of Responsible Officer / Title **Signature of Responsible Officer** **Date**

INSTRUCTIONS FOR COMPLETING
EIC UTILIZATION FORM

The purpose of these instructions is to assist bidders in properly completing the EIC Utilization Form.

This form when submitted with your bid, provides information to the City of Tacoma to accurately review and evaluate your proposed EIC usage.

1. * Base Bid is the prime contractor's bid, plus any alternates, additives and deductibles selected by the City of Tacoma. Also, please refer to Items #10-12 below.

2. Column "a" – List all **Certified Business(s)** that you will be awarding a contract to if you are the successful bidder.

3. Column "b" – Identify if the **Certified Business(s)** is being utilized as an MBE, WBE, or SBE. (Businesses may count towards multiple requirements).

4. Column "c" – List the appropriate NAICS code(s) for the scope of work, services, or materials/supplies for each **Certified Business**.

5. Column "d" – The bid amount must be indicated for ***all*** listed **Certified Businesses** that you plan on doing business with. This quote is the price that you and the **Certified Businesses** have negotiated prior to bid opening.

6. Column "e" – The bid amount must be indicated for ***all*** listed **Certified Businesses** that you plan on doing business with. This quote is the price that you and the material supplier have negotiated prior to bid opening.

7. Column "f" – Estimated MBE Usage Dollar Amount: For all MBE firms used, multiply the amount in Column "d" by 1.0 plus the amount in Column "e" by 0.20. Insert the total amount in this column.

8. Column "g" – Estimated WBE Usage Dollar Amount: For all WBE firms used, multiply the amount in Column "d" by 1.0 plus the amount in Column "e" by 0.20. Insert the total amount in this column.

9. Column "h"– Estimated SBE Usage Dollar Amount: For all MBE, WBE, or SBE firms used, Multiply the amount in Column "d" by 1.0 plus the amount in Column "e" by 0.20. Insert the total amount in this column.

10. Block "i" – The percentage of actual MBE utilization calculated on the Base Bid only. (Divide the sum of Estimated MBE Usage Dollar Amount (Column "f") by your Base Bid (*) then multiply by 100 to get a percentage: $ amounts from column "f" divided by Base Bid (*) x 100 = MBE usage as a percentage of the Base Bid.)

11. Block "j" – The percentage of actual WBE utilization calculated on the Base Bid only. (Divide the sum of Estimated WBE Usage Dollar Amount (Column "g") by your Base Bid (*) then multiply by 100 to get a percentage: $ amounts from column "g" divided by Base Bid (*) x 100 = WBE usage as a percentage of the Base Bid).

12. Block “k” – The percentage of actual SBE utilization calculated on the Base Bid only. (Divide the sum of Estimated SBE Usage Dollar Amount (Column “h”) by your Base Bid (*) then multiply by 100 to get a percentage: $ amounts from column “h” divided by Base Bid (*) x 100 = SBE usage as a percentage of the Base Bid.)

It is the prime contractor’s responsibility to check the status of **Certified Businesses** prior to bid opening. Call the EIC Office at 253-591-5826 or email at EICOffice@cityoftacoma.org for additional information.

CHAPTER 1.07
EQUITY IN CONTRACTING

Sections:

1.07.010 Policy and purpose.

It is the policy of the City of Tacoma that citizens be afforded an opportunity for full participation in our free enterprise system and that historically underutilized business enterprises shall have an equitable opportunity to participate in the performance of City contracts. The City finds that in its contracting for supplies, services and public works, there has been historical underutilization of small and minority-owned businesses located in certain geographically and economically disfavored locations and that this underutilization has had a deleterious impact on the economic well-being of the City. The purpose of this chapter is to remedy the effects of such underutilization through use of narrowly tailored contracting requirements to increase opportunities for historically underutilized businesses to participate in City contracts. It is the goal of this chapter to facilitate a substantial procurement, education, and mentorship program designed to promote equitable participation by historically underutilized businesses in the provision of supplies, services, and public works to the City. It is not the purpose of this chapter to provide any person or entity with any right, privilege, or claim, not shared by the public, generally, and this chapter shall not be construed to do so. This chapter is adopted in accordance with Chapter 35.22 RCW and RCW 49.60.400.

(Ord. 28625 Ex. A; passed Nov. 5, 2019: Ord. 27867 Ex. A; passed Dec. 15, 2009)

1.07.020 Definitions.

Terms used in this chapter shall have the following meanings unless defined elsewhere in the Tacoma Municipal Code ("TMC"), or unless the context in which they are used clearly indicates a different meaning.

1.07.020.B

A. "Bid" means an offer submitted by a Respondent to furnish Supplies, Services, and/or Public Works in conformity with the Specifications and any other written terms and conditions included in a City request for such offer.

B. "Bidder" means an entity or individual who submits a Bid, Proposal or Quote. See also "Respondent."

1.07.020.C

"Certified Business" means an entity that has been certified as a Disadvantaged Business Enterprise ("DBE"), Small Business Enterprise ("SBE"), Minority Business Enterprise ("MBE"), Women Business Enterprise ("WBE"), or Minority and Women's Business Enterprise ("MWBE") by the Washington State Office of Minority and Women's Business Enterprise and meets the criteria set forth in Section 1.07.050 (2) of this chapter and has been approved as meeting that criteria by the Community and Economic Development Department Program Manager.

"City" means all Departments, Divisions and agencies of the City of Tacoma.

"Contract" means any type of legally binding agreement regardless of form or title that governs the terms and conditions for procurement of Public Works and Improvements and/or Non-Public Works and Improvements Supplies and Services. Contracts include the terms and conditions found in Specifications, Bidder or Respondent Submittals, and purchase orders issued by the City. A "Contract" as used in this chapter shall include an agreement between the City and a non-profit entity to perform construction-related services for Public Works. A "Contract" does not include: (1) awards made by the City with

federal/state grant or City general funds monies to a non-profit entity where the City offers assistance, guidance, or supervision on a project or program, and the recipient of the grant awards uses the grant moneys to provide services to the community; (2) sales transactions where the City sells its personal or real property; (3) a loan transaction where the City is acting as a debtor or a creditor; (4) lease, franchise; (5) agreements to use City real property (such as Licenses, Permits and Easements) and, (6) banking and other financial or investment services.

"Contractor" means any Person that presents a Submittal to the City, enters into a Contract with the City, and/or performs all or any part of a Contract awarded by the City, for the provision of Public Works, or Non-Public Works and Improvements, Supplies or Services.

1.07.020.G

"Goals" means the annual level of participation by Certified Businesses in City Contracts as established in this chapter, the Program Regulations, or as necessary to comply with applicable federal and state nondiscrimination laws and regulations. Goals for individual Contracts may be adjusted as provided for in this chapter and shall not be construed as a minimum for any particular Contract or for any particular geographical area.

1.07.020.N

"Non-Public Works and Improvements" means all competitively solicited procurement of Supplies and/or Services by the City not solicited as Public Works.

1.07.020.P

"Person" means individuals, companies, corporations, partnerships, associations, cooperatives, any other legally recognized business entity, legal representative, trustee, or receivers.

"Program Manager" means the individual appointed, from time to time, by the City's Community and Economic Development Director to administer the Program Regulations.

"Program Regulations" means the written regulations and procedures adopted pursuant to this chapter for procurement of Supplies, Services and Public Works.

"Proposal" means a written offer to furnish Supplies or Services in response to a Request for Proposals. This term may be further defined in the Purchasing Policy Manual and/or in competitive solicitations issued by the City.

"Public Works (or "Public Works and Improvements)" means all work, construction, alteration, repair, or improvement other than ordinary maintenance, executed at the cost of the City, or that is by law a lien or charge on any property therein. This term includes all Supplies, materials, tools, and equipment to be furnished in accordance with the Contract for such work, construction, alteration, repair, or improvement.

1.07.020.Q

"Quote" means a competitively solicited written offer to furnish Supplies or Services by a method of procurement that is less formalized than a Bid or a Proposal. This term may be further defined in the Purchasing Policy Manual.

1.07.020.R

"Respondent" means any entity or Person, other than a City employee, that provides a Submittal in response to a request for Bids, Request for Proposals, Request for Qualifications, request for quotes or other request for information, as such terms are defined in Section 1.06.251 TMC. This term includes any such entity or Person whether designated as a supplier, seller, vendor, proposer, Bidder, Contractor, consultant, merchant, or service provider that; (1) assumes a contractual responsibility to the City for provision of Supplies, Services, and/or Public Works; (2) is recognized by its industry as a provider of such Supplies, Services, and/or Public works; (3) has facilities similar to those commonly used by Persons engaged in the same or similar business; and/or (4) distributes, delivers, sells, or services a product or performs a Commercially Useful Function.

1.07.020.S

"Services" means non-Public Works and Improvements services and includes professional services, personal services, and purchased services, as such terms are defined in Section 1.06.251 TMC and/or the City's Purchasing Policy Manual.

"Submittal" means Bids, Proposals, Quotes, qualifications or other information submitted in response to requests for Bids, Requests for Proposals, Requests for Qualifications, requests for Quotations, or other City requests for information, as such terms are defined in Section 1.06.251 TMC.

"Supplies" means materials, Supplies, and other products that are procured by the City through a competitive process for either Public Works procurement or Non-Public Works and Improvements procurement unless an approved waiver has been granted by the appropriate authority.

1.07.020.T

"Tacoma Public Utilities Service Area" means any ZIP code in which Tacoma Public Utilities maintains infrastructure or provides retail services.

1.07.020.W

"Waiver" means a discretionary decision by the City that the one or more requirements of this chapter will not be applied to a Contract or Contracts.

(Ord. 28766 Ex. A; passed June. 8, 2021: Ord. 28625 Ex. A; passed Nov. 5, 2019: Ord. 28274 Ex. A; passed Dec. 16, 2014: Ord. 28141 Ex. A; passed Mar. 26, 2013: Ord. 27867 Ex. A; passed Dec. 15, 2009)

1.07.030 Discrimination prohibited.

A. No person that is engaged in the construction of public works for the City, engaged in the furnishing of laborers or craftspeople for public works of the City, or is engaged for compensation in the provision of non-public works and improvements supplies and/or services to the City, shall discriminate against any other person on the basis of race, religion, color, national origin or ancestry, sex, gender identity, sexual orientation, age, marital status, familial status, or the presence of any sensory, mental or physical disability, or "pregnancy outcomes" under TMC 1.29.040, in employment. Such discrimination includes the unfair treatment or denial of normal privileges to a person as manifested in employment upgrades, demotions, transfers, layoffs, termination, rates of pay, recruitment of employees, or advertisement for employment.

B. The violation of the terms of RCW 49.60 or Chapter 1.29 TMC by any person that is engaged in the construction of public works for the City, is engaged in the furnishing of laborers or craftspeople for public works of the City, or is engaged for compensation in the provision of non-public works and improvements supplies and/or services shall result in the rebuttable presumption that the terms of this chapter have also been violated. Such violation may result in termination of any City contract the violator may have with the City and/or the violator's ineligibility for further City Contracts.

(Ord. 28859 Ex. A; passed Nov. 22, 2022: Ord. 27867 Ex. A; passed Dec. 15, 2009)

1.07.040 Program administration.

A. The Community and Economic Development Director, or their designated Program Manager, shall be responsible for administering this chapter and obtaining compliance with respect to contracts entered into by the City and/or its contractors. It shall be the duty of the Director to pursue the objectives of this chapter by conference, conciliation, persuasion, investigation, or enforcement action, as may be necessary under the circumstances. The Director is authorized to implement an administrative and compliance program to meet these responsibilities and objectives.

B. The Director is hereby authorized to adopt and to amend administrative regulations known as the Program Regulations, to properly implement and administer the provisions of this chapter. The Program Regulations shall be in conformance with City of Tacoma policies and state and federal laws and be designed to encourage achievement of the Goals set forth herein.

(Ord. 28766 Ex. A; passed June. 8, 2021: Ord. 28141 Ex. A; passed Mar. 26, 2013: Ord. 28110 Ex. B; passed Dec. 4, 2012: Ord. 27867 Ex. A; passed Dec. 15, 2009)

1.07.050 Approval as a Certified Business.

A. The Program Manager shall approve an entity as a Certified Business if all of the following criteria are satisfied:

1. The entity is certified as a DBE, SBE, MBE, WBE, or MWBE through the state of Washington's Office of Minority & Women Business Enterprises; and

2. The entity can demonstrate that it also meets at least one of the following additional requirements:

a. The personal residence of the owner is located within the City of Tacoma or Tacoma Public Utilities Service Area, or

b. The entity's business offices are located in any county of the Tacoma Public Utilities Service Area or any county adjacent to Pierce County, or

c. When the work is performed outside of Pierce County, the entity's business offices may be located in an adjacent county in which the work is performed, or

d. Such additional information as the Program Manager or designee may require.

3. When another governmental entity has an equivalent business classification process, the City may enter into an interlocal cooperative agreement for mutual recognition of certifications.

B. Appeals.

The applicant may appeal any approval determination by the Program Manager under this chapter to the Director. The appeal must be made in writing and must set forth the specific reasons for the appeal. The Director shall make a decision on the appeal request within a reasonable time, which decision shall be final unless further appeal is made to the Hearing Examiner. In that event, the Hearing Examiner Rules of Procedure for Hearings, Chapter 1.23 TMC, shall be applicable to that appeal proceeding.

(Ord. 28766 Ex. A; passed June. 8, 2021: Ord. 28625 Ex. A; passed Nov. 5, 2019: Ord. 28274 Ex. A; passed Dec. 16, 2014: Ord. 28147 Ex. A; passed May 7, 2013: Ord. 28141 Ex. A; passed Mar. 26, 2013: Ord. 28110 Ex. B; passed Dec. 4, 2012: Ord. 27867 Ex. A; passed Dec. 15, 2009)

1.07.060 Program requirements.

A. The program shall meet the following requirements:

1. Establishment of Annual Goals.

The Program Regulations adopted pursuant to this chapter shall state reasonably achievable cumulative annual goals for utilization of Certified Businesses in the provision of supplies, services, and public works procured by the City. Cumulative annual goals for the participation of Certified Businesses in City contracts shall be based on the number of qualified Certified Businesses operating within the Tacoma Public Utilities Service Area. The dollar value of all contracts awarded by the City to Certified Businesses in the procurement of supplies, services, and public works shall be counted toward the accomplishment of the applicable goal.

2. Application of Annual Goals to Contracts.

The Program Manager shall consult with City departments/divisions to establish department/division specific goals for competitively solicited contracts in accordance with this chapter and the Program Regulations.

B. Exceptions:

City departments/divisions or the Program Manager may request an exception to one or more of the requirements of this chapter as they apply to a particular Contract or Contracts. Exceptions may be granted in any one or more of the following circumstances:

1. Emergency:

The supplies, services and/or public works must be provided with such immediacy that neither the City nor the contractor can comply with the requirements herein. Such emergency will be deemed documented whenever a waiver of competitive solicitation for emergency situations is authorized under Tacoma Municipal Code Chapter 1.06.257 or as may be hereinafter amended.

2. Not Practicable:

The Contract involves special facilities or market conditions or specially tailored or performance criteria-based products, such that compliance with the requirements of this chapter would cause financial loss to the City or an interruption of vital services to the public. Such circumstances must be documented by the department/division awarding the Contract and approved by the senior financial manager or, for Contracts where the estimated cost is over $500,000 (excluding sales tax), approved by the Board of Contracts and Awards ("C&A Board").

3. Sole source:

The supplies, services, and/or public works are available from only one feasible source, and subcontracting possibilities do not reasonably exist as documented by the department/division awarding the Contract and approved by the senior financial manager or, for Contracts where the estimated cost is over $500,000 (excluding sales tax), approved by the C&A Board.

4. Government purchasing.

The Contract or Contracts are the result of a federal, state or inter-local government purchasing agreement and the use of such agreement in lieu of a bid solicitation conducted by the City is approved by the senior financial manager.

5. Lack of certified contractors:

An insufficient number of qualified contractors exist to create any utilization opportunities as documented by the Program Manager.

C. Waiver:

If, after receipt of Submittals but prior to Contract award, it is determined that due to unforeseen circumstances, waiver of goals is in the best interests of the City, the Director or Superintendent of the department/division awarding the Contract may request in writing that the City Manager or designee, on behalf of General Government, or the Director of Utilities or designee, on behalf of the Department of Public Utilities, approve such waiver..

Waivers may be granted only after determination by the City Manager or Director of Utilities that compliance with the requirements of this chapter would impose unwarranted economic burden on, or risk to, the City of Tacoma as compared with the degree to which the purposes and policies of this chapter would be furthered by requiring compliance.

(Ord. 28766 Ex. A; passed June. 8, 2021: Ord. 28625 Ex. A; passed Nov. 5, 2019: Ord. 28141 Ex. A; passed Mar. 26, 2013: Ord. 27867 Ex. A; passed Dec. 15, 2009)

1.07.070 Evaluation of submittals.

A. All submittals for a supplies, services, or public works and improvements contracts shall be evaluated for attainment of the Certified Business requirements established for that contract in accordance with this chapter and the Program Regulations.

B. The determination of Certified Business usage and the calculation of Certified Business requirements per this section shall include the following considerations:

1. General.

The dollar value of the contract awarded by the City to a Certified Business in the procurement of supplies, services, or public works shall be counted toward achievement of the respective goal.

2. Supplies.

A public works and improvements contractor may receive credit toward attainment of the Certified Business requirement(s) for expenditures for supplies obtained from a Certified Business; provided such Certified Business assumes the actual and contractual responsibility for delivering the supplies with its resources. The contractor may also receive credit toward attainment of the Certified Business goal for the amount of the commission paid to a Certified Business resulting from a supplies contract with the City; provided the Certified Business performs a commercially useful function in the process.

3. Services and Public Works subcontracts.

Any bid by a Certified Business or a bidder that utilizes a Certified Business shall receive credit toward requirement attainment based on the percentage of Certified Business usage demonstrated in the bid. A contractor that utilizes a Certified Business as a subcontractor to provide services or public works shall receive a credit toward the contractor's attainment of the respective requirement based on the value of the subcontract with that firm.

4. Brokers, Fronts, or Similar Pass-Through Arrangements.

Certified Business acting as brokers, fronts, or similar pass-through arrangements (as such terms are defined in the Program Regulations) shall not count toward the requirement attainment unless the activity reflects normal industry practices and the broker performs a commercially useful function.

C. Evaluation of competitively solicited submittals for public works and improvements and for services when a requirement has been established for the contract to be awarded shall be as follows:

1. When contract award is based on price.

The lowest priced bid submitted by a responsive and responsible bidder will be reviewed to determine if it meets the requirement. Certified Businesses may self-count utilization on such bids if they will perform the work for the scope the requirement is based upon.

a. If the low bidder meets the requirements, the bid shall be presumed the lowest and best responsible bid for contract award.

b. Any bidder that does not meet the stated Certified Business requirements shall be considered a non-responsible bidder unless a waiver of one or more of the requirements of this chapter is granted, in the City's sole discretion, pursuant to the criteria and processes in Tacoma Municipal Code 1.07.060.C.

2. When contract award is based on qualifications or other performance criteria in addition to price, solicitations shall utilize a scoring system that promotes participation by certified contractors. The Program Regulations may establish further requirements and procedures for final selection and contract award, including:

a. Evaluation of solicitations for Architectural and Engineering (A&E) services;

b. Evaluation and selection of submittals in response to requests for proposals; and

c. Selection of contractors from pre-qualified roster(s).

(Ord. 28766 Ex. A; passd Jun. 8, 2021: Ord. 28625 Ex. A; passed Nov. 5, 2019: Ord. 28141 Ex. A; passed Mar. 26, 2013: Ord. 27867 Ex. A; passed Dec. 15, 2009)

1.07.080 Contract compliance.

A. The contractor awarded a contract based on Certified Business participation shall, during the term of the contract, comply with the requirements established in said contract. To ensure compliance with this requirement following contract award, the following provisions apply:

1. Any substitutions for or failure to utilize Certified Business projected to be used must be approved in advance by the Program Manager. Substitution of one Certified Business with another shall be allowed where there has been a refusal to execute necessary agreements by the original Certified Business, a default on agreements previously made or other reasonable excuse; provided that the substitution does not increase the dollar amount of the bid.

2. Where it is shown that no other Certified Business is available as a substitute and that failure to secure participation by the Certified Business identified in the solicitation is not the fault of the respondent, substitution with a non-Certified Business shall be allowed; provided, that, the substitution does not increase the dollar amount of the bid.

3. If the Program Manager determines that the contractor has not reasonably and actively pursued the use of replacement Certified Business, such contractor shall be deemed to be in non-compliance.

B. Record Keeping.

All contracts shall require contractors to maintain relevant records and information necessary to document compliance with this chapter and the contractor's utilization of Certified Businesses, and shall include the right of the City to inspect such records.

(Ord. 28766 Ex. A; passed Jun. 8, 2021: Ord. 28625 Ex. A; passed Nov. 5, 2019: Ord. 28141 Ex. A; passed Mar. 26, 2013: Ord. 27867 Ex. A; passed Dec. 15, 2009)

1.07.090 Program monitoring.

A. An Advisory Committee shall monitor compliance with all provisions of this chapter and the related Regulations. The Program Manager shall establish procedures to collect data and monitor the effect of the provisions of this chapter to assure, insofar as is practical, that the remedies set forth herein do not disproportionately favor one or more racial, gender, ethnic, or other protected groups, and that the remedies do not remain in effect beyond the point that they are required to eliminate the effects of under utilization in City contracting, unless such provisions are supported by a Disparity Study. The Program Manager shall have the authority to obtain from City departments/divisions, respondents, and contractors such relevant records, documents, and other information as is reasonably necessary to determine compliance.

B. The Program Manager shall submit an annual report to the Community and Economic Development Director, Director of Utilities, and the City Manager detailing performance of the program. The report shall document Certified Business utilization levels, waivers, proposed modifications to the program, and such other matters as may be specified in the Program Regulations.

(Ord. 28766 Ex. A; passed Jun. 8, 2021: Ord. 28625 Ex. A; passed Nov. 5, 2019: Ord. 28141 Ex. A; passed Mar. 26, 2013: Ord. 28110 Ex. B; passed Dec. 4, 2012: Ord. 27867 Ex. A; passed Dec. 15, 2009)

1.07.100 Enforcement.

The Director, or designee, may investigate the employment practices of contractors to determine whether or not the requirements of this chapter have been violated. Such investigation shall be conducted in accordance with the procedures established in the Program Regulations.

(Ord. 28625 Ex. A; passed Nov. 5, 2019: Ord. 28141 Ex. A; passed Mar. 26, 2013: Ord. 28110 Ex. B; passed Dec. 4, 2012: Ord. 27867 Ex. A; passed Dec. 15, 2009)

1.07.110 Remedies.

A. Upon receipt of a determination of contractor violation by the Program Manager, the City Manager or Director of Utilities, as appropriate, may take the following actions, singly or together, as appropriate:

1. Forfeit the contractor’s bid bond and/or performance bond;

2. Publish notice of the contractor's noncompliance;

3. Cancel, terminate, or suspend the contractor's contract, or portion thereof;

4. Withhold funds due contractor until compliance is achieved; and/or

5. Recommend appropriate action including, but not limited to, disqualification of eligibility for future contract awards by the City (debarment) per Section 1.06.279 TMC;

B. Prior to exercise of any of the foregoing remedies, the City shall provide written notice to the contractor specifying the violation and the City's intent to exercise such remedy or remedies. The notice shall provide that each specified remedy becomes effective within ten business days of receipt unless the contractor appeals said action to the Hearing Examiner pursuant to Chapter 1.23 TMC.

C. When non-compliance with this chapter or the Program Regulations has occurred, the Program Manager and the department/division responsible for enforcement of the contract may allow continuation of the contract upon the contractor's development of a plan for compliance acceptable to the Director.

(Ord. 28625 Ex. A; passed Nov. 5, 2019: Ord. 28141 Ex. A; passed Mar. 26, 2013: Ord. 28110 Ex. B; passed Dec. 4, 2012: Ord. 27867 Ex. A; passed Dec. 15, 2009)

1.07.120 Unlawful acts.

It shall be unlawful for any Person to willfully prevent or attempt to prevent, by intimidation, threats, coercion, or otherwise, any Person from complying with the provisions of this chapter.

(Ord. 27867 Ex. A; passed Dec. 15, 2009)

1.07.130 Severability.

If any section of this chapter or its application to any Person or circumstance is held invalid by a court of competent jurisdiction, then the remaining sections of this chapter, or the application of the provisions to other Persons or circumstances, shall not be affected.

(Ord. 27867 Ex. A; passed Dec. 15, 2009)

1.07.140 Review of program.

This chapter shall be in effect through and until December 31, 2024, unless the City Council shall determine at an earlier date that the requirements of this chapter are no longer necessary. If this chapter has not been repealed by July 1, 2024, the City Council shall determine by the end of that year whether substantial effects or lack of opportunity of MWBEs and/or SBEs remain true in the relevant market and whether, and for how long, some or all of the requirements of this chapter should remain in effect.

(Ord. 28625 Ex. A; passed Nov. 5, 2019: Ord. 28274 Ex. A; passed Dec. 16, 2014: Ord. 28141 Ex. A; passed Mar. 26, 2013: Ord. 27867 Ex. A; passed Dec. 15, 2009)

PART IV

CITY OF TACOMA

LOCAL EMPLOYMENT AND APPRENTICESHIP TRAINING PROGRAM (LEAP) REGULATIONS FOR PUBLIC WORKS CONTRACTS

City of Tacoma
Community and Economic Development Department
LEAP Office
747 Market Street, Room 900
Tacoma, WA 98402
(253) 591-5590
leap@cityoftacoma.org

LEAP
LOCAL EMPLOYMENT AND APPRENTICESHIP TRAINING PROGRAM
ABBREVIATED PROGRAM REQUIREMENTS

LEAP is a mandatory City of Tacoma program adopted to provide employment opportunities for City of Tacoma residents and residents of Economically Distressed Areas of the Tacoma Public Utilities Service Area. Based on the dollar amounts of projects, it requires Prime Contractors performing qualifying public works projects or service contracts ensure that a percentage of the total labor hours worked on the project are performed by LEAP-Qualified local employees and/or LEAP-Qualified apprentices approved by the Washington State Apprenticeship Council (SAC), residents of Tacoma, residents of surrounding Economically Distressed Areas, and/or TPU Service Areas (as outlined below). Compliance may be met through any combination LEAP-Qualified employees.

Prime Contractors may obtain further information by contacting the City of Tacoma's LEAP Coordinator, Deborah Trevorrow, at (253) 591-5590 or leap@cityoftacoma.org. The LEAP Coordinator can assist contractors in the recruitment of qualified entry-level workers to work on City of Tacoma Public Works projects. The LEAP Office is in the Tacoma Municipal Building, 747 Market Street, Rm 900**.**

***NOTE – for projects bid on or after October 10, 2023, compliance with workforce requirements and payrolls will be strictly enforced.**

LEAP PROGRAM REQUIREMENTS:

1. LOCAL EMPLOYMENT Requirement: The Prime Contractor is required to ensure that 15 percent of the total Labor Hours worked on the project are performed by residents of the City of Tacoma or Economically Distressed ZIP Codes for the following projects:

   a) Civil Projects over $250,000
   b) Building Projects over $750,000

2. APPRENTICE Requirement: The Contractor is required to ensure that an additional 15 percent of the total Labor Hours worked on any project over $1,000,000 are performed by Apprentices who are residents of the Tacoma Public Utilities Service Area. This is in addition to the Local Employment Goal.

3. SUBCONTRACTOR NOTIFICATION: Prime Contractors shall notify all Subcontractors of the LEAP Program requirement(s). Subcontractor labor hours may be utilized towards achievement of the LEAP Requirements. Owner/Operator hours may be used for the Local Employment Requirement.

4. FAILURE TO MEET LEAP UTILIZATION REQUIREMENT: Contractors shall be assessed an amount for each hour that is not achieved. The amount per hour shall be based on the percent of the requirement that is met. All rounding shall be done down to the nearest whole percent. The amount per hour that shall be assessed is as follows:

- 100% achievement $0.00 penalty
- 99% to 90% achievement $2.00 penalty
- 89% to 75% achievement $3.50 penalty
- 74% to 50% achievement $5.00 penalty
- 49% to 1% achievement $7.50 penalty
- 0% achievement $10.00 penalty

LEAP DOCUMENT SUBMITTALS:**

1. *LEAP EMPLOYEE VERIFICATION FORM*: upon request, the Contractor must provide the LEAP Office with a form for every person whom the contractor thinks will assist with attaining credit towards meeting the LEAP Utilization Requirements with at least one piece of verifying documentation. The LEAP Office staff will respond regarding whether or not the employee is LEAP-Qualified.

2. *WEEKLY CERTIFIED PAYROLL*: In LCP Tracker: the Prime and Subcontractors must submit weekly Certified Payrolls that include, employee name, address, social security number, craft/trade, class, hours worked on this job, rate of pay, and gross wages paid including benefits for this job.

3. *DEPARTMENT OF LABOR & INDUSTRIES (L&I)*: The Prime must enter the project in the L&I project site under the 'Tacoma, City of' account and notify the LEAP Office when this has been completed.

***WITHHOLDING PROGRESS PAYMENTS*: The LEAP Coordinator may withhold progress payments for failure to follow the above-outlined procedures

City of Tacoma
LEAP Office
747 Market Street, Room 900
Tacoma, WA 98402
(253) 591-5590 or leap@cityoftacoma.org

LEAP

Documents and Submittal Schedule

In the attached packet, you will find the LEAP documentation and forms that are required to be submitted by the Prime and Sub Contractors.

- **LEAP Abbreviated Program Requirements**: brief overview of LEAP Program requirements
- **LEAP Employee Verification Form**: to be submitted, upon request, for each employee who may be a LEAP-qualified employee
- **Tacoma Public Utilities Service Area Map and List, Economically Distressed ZIP Codes Map and List**: for your reference on LEAP-qualified zoning areas

In addition, the City of Tacoma will also require from the Prime Contractor and all its Subcontractors:

- **Weekly Certified Payrolls**: to be submitted via LCP Tracker weekly, biweekly or monthly.
- **Statement of Intent to Pay Prevailing Wages**: to be submitted prior to commencing work
- **Affidavit of Wages Paid**: to be submitted upon completion of each contractor's work
- **Document Verification**: provide required information when requested from LEAP Office

Please submit above documents as instructed by the LEAP Coordinator.

If you have any questions or request further information, please feel free to contact the City of Tacoma's LEAP Program at (253) 591-5590 or leap@cityoftacoma.org

CHAPTER 1.90
LOCAL EMPLOYMENT AND APPRENTICESHIP TRAINING PROGRAM

Sections:

1.90.010 Purpose.

The purpose of this Chapter is to establish a means of providing for the development of a trained and capable workforce possessing the skills necessary to fully participate in the construction trades.

(Ord. 26301 § 1; passed Oct. 6, 1998)

1.90.020 Scope.

The provisions of this Chapter shall apply to all Public Works or Improvements funded in whole or in part with City funds or funds which the City expends or administers in accordance with the terms of a grant.

(Ord. 26301 § 1; passed Oct. 6, 1998)

1.90.030 Definitions.

As used in this chapter, the following terms shall have the following meanings:

A. "Apprentice" shall mean a person enrolled in a course of training specific to a particular construction trade or craft, which training shall be approved by the Washington State Apprenticeship and Training Council established pursuant to RCW 49.04.010.

B. "Building Projects" shall mean all Public Works or Improvements having an Estimated Cost greater than $750,000.00, and for which a building permit must be issued pursuant to Chapter 1 of the current edition of the state building code (Uniform Building Code).

C. "City" shall mean all divisions and departments of the City of Tacoma, and all affiliated agencies, provided, however, that the Tacoma Community Redevelopment Authority shall not be included within this definition.

D. "Civil Projects" shall mean all Public Works or Improvements that are not defined as a "Building Project," provided that those projects having an Estimated Cost of less than $250,000.00 shall not be included in this definition.

E. "Contractor or Service Provider" means a person, corporation, partnership, or joint venture entering into a contract with the City to construct a Public Work or Improvement.

F. "Director" shall mean the Director of Community and Economic Development, or the Director's Designee.

G. "Economically Distressed ZIP Codes" shall mean ZIP codes in the Tacoma Public Utilities Service Area that meet two out of three (2/3) of the thresholds of:

1. High concentrations of residents living under 200% of the federal poverty line in terms of persons per acre (69th percentile)

2. High concentrations of unemployed people in terms of persons per acre (45th percentile)

3. High concentrations of people 25 years or older without a college degree in terms of persons per acre (75th percentile)

Said thresholds shall be updated within 30 days following any Prevailing Wage updates issued by the Washington State Labor and Industry. All updates are to be published on the first business day in August and in February of each calendar year.

H. “Electrical Utility” and “Water Utility” shall mean, respectively, the Light Division of the Department of Public Utilities of the City of Tacoma, and shall include the electrical and telecommunications services of that Division, and the Water Division of the Department of Public Utilities of the City of Tacoma.

I. “Estimated Cost” shall mean the anticipated cost of a Public Work or Improvement, as determined by the City, based upon the expected costs of materials, supplies, equipment, and labor, but excluding taxes and contingency funds.

J. “Estimated Labor Hours” shall mean the anticipated number of Labor Hours determined by the City to be necessary to construct a Public Work or Improvement and set forth in the specifications for the project, or as may be subsequently revised due to contract or project adjustment, or pursuant to an agreed upon change order.

K. “Existing Employee” shall mean an employee whom the Contractor or Service Provider can demonstrate was actively employed by the Contractor or Service Provider for at least 1000 hours in the calendar year prior to bid opening plus one month following bid opening, and who was performing work in the construction trades.

L. “Labor Hours” shall mean the actual number of hours worked by workers receiving an hourly wage who are employed on the site of a Public Work or Improvement, and who are subject to state or federal prevailing wage requirements. The term “Labor Hours” shall include hours performed by workers employed by the Contractor or Service Provider and all Subcontractors, and shall include additional hours worked as a result of a contract or project adjustment or pursuant to an agreed upon change order. The term “Labor Hours” shall not include hours worked by workers who are not subject to the prevailing wage requirements set forth in either RCW 39.12 or the Davis-Bacon Act - 40 U.S.C. 276 (a).

M. “LEAP Coordinator” shall mean the City of Tacoma staff member who administers LEAP.

N. “LEAP Program” or “Program” shall mean the City of Tacoma’s Local Employment and Apprenticeship Training Program, as described in this chapter.

O. “LEAP Regulations” or “Regulations” shall mean the rules and practices established in this document.

P. “LEAP Utilization Plan” shall mean the document submitted by the Contractor to the LEAP Coordinator which outlines how the associated goals will be met on the project.

Q. “Priority Hire Resident” shall mean any resident within the Economically Distressed ZIP Codes.

R. “Project Engineer” shall mean the City employee who directly supervises the engineering or administration of a particular construction project subject to this chapter.

S. “Public Work or Improvement” shall have the same meaning as provided in Section 39.04.010 RCW, as that Section may now exist or hereafter be amended.

T. “Resident of Tacoma” shall mean any person, not defined as a Resident of the Community Empowerment Zone, who continues to occupy a dwelling within the boundaries of the City of Tacoma, has a present intent to continue residency within the boundaries of the City, and who demonstrates the genuineness of that intent by producing evidence that the person’s presence is more than merely transitory in nature.

U. “Service Area - Electrical” or “Electrical Service Area” shall mean that area served with retail sales by the Electrical Utility of the City of Tacoma at the time a bid is published by the Electrical Utility for a Public Work or Improvement to be performed primarily for the Electrical Utility.

V. “Service Area - Water” or “Water Service Area” shall mean that area served with retail sales by the water utility of the City of Tacoma at the time a bid is published by the water utility for a Public Work or Improvement to be performed primarily for the water utility.

W. “Service Contract” shall mean all City contracts relating to a Public Work or Improvement which utilize labor at a City site and which are not within the exceptions to nor defined as “Building Projects” or “Civil Projects.”

X. “Subcontractor” means a person, corporation, partnership, or joint venture that has contracted with the Contractor or Service Provider to perform all or part of the work to construct a Public Work or Improvement by a Contractor.

Y. “Tacoma Public Utilities” means the City of Tacoma, Department of Public Utilities.

Z. “Tacoma Public Utilities Service Area” shall mean every ZIP code listed by Tacoma Public Utilities as an area that either receives services or maintains infrastructure to provide services.

AA. Washington State Labor and Industry Prevailing Wage shall mean the hourly wage, usual benefits and overtime, paid in the largest city in each county, to the majority of workers, laborers, and mechanics. Prevailing wages are established, by the Department of Labor & Industries, for each trade and occupation employed in the performance of public work. They are established separately for each county, and are reflective of local wage conditions.

(Ord. 28520 Ex. A; passed Jul. 17, 2018: Ord. 28147 Ex. B; passed May 7, 2013: Ord. 28110 Ex. C; passed Dec. 4, 2012: Ord. 27815 Ex. A; passed Jun. 30, 2009: Ord. 27368 § 1; passed Jun. 21, 2005: Ord. 26698 § 1; passed Sept. 12, 2000: Ord. 26301 § 1; passed Oct. 6, 1998)

1.90.040 LEAP goals.

A. Utilization Goals.

1. All Contractors constructing Civil Projects or Building Projects, and all Service Providers involved with the construction of a Public Work or Improvement, shall ensure that at least 15 percent of the total Labor Hours actually worked on the Project are performed by persons having their residence within the boundaries of the City of Tacoma or Economically Distressed ZIP Codes, whether or not any such person is an Apprentice.

a. The thresholds for this section shall be $250,000.00 for Civil Projects and $750,000.00 for Building Projects.

2. Fifteen percent (15%) of the Total Labor Hours on contracts above one-million dollars ($1,000,000.00) shall have work performed by Apprentices who are residents of the Tacoma Public Utilities Service Area consistent with RCW 39.04.320(1)(a), subject to waiver based on exceptions as specified in RCW 39.04.320(2)(a), (b), and (c).

3. Labor Hours performed by non-residents of the State of Washington will be deducted from a project's total Labor Hours for purposes of determining compliance with the requirements of this chapter.

4. All Contractors and Service Providers shall submit a LEAP Utilization Plan as provided for in the regulations adopted under this chapter, and shall meet with the LEAP Coordinator to review said Plan prior to being issued a Notice to Proceed. Failure to submit a LEAP Utilization Plan may be grounds for the City to withhold remittance of a progress payment until such Plan is received from the responsible Contractor or Provider. A meeting with the LEAP Coordinator prior to issuance of a Notice to Proceed shall be excused only when the LEAP Coordinator is unavailable to meet prior to the scheduled date for issuance of the Notice to Proceed and the Contractor and the LEAP Coordinator have otherwise scheduled a meeting for the coordinator to review the Contractor's or Provider's plan.

The Contractor or Service Provider shall be responsible for meeting the LEAP utilization goal requirements of the contract, including all amendments and change orders thereto, and shall be responsible for overall compliance for all hours worked by Subcontractors. To the extent possible, the Contractor or Service Provider shall recruit Apprentices from multiple trades or crafts.

B. Failure to Meet Utilization Goal.

1. Contracts for the construction of Building projects or Civil projects and Service Contracts shall provide that Contractors or Service Providers failing to meet the LEAP utilization goals shall be assessed an amount for each hour that is not achieved. The amount per hour shall be based on the extent the Contractor or Service Provider met its goal. The amount per hour that shall be assessed shall be as follows:

Percent of Goal Met	Assessment per unmet hour
100%	$ 0.00
90% - 99%	$ 2.00
75% to 89%	$ 3.50
50% to 74%	$ 5.00
1% to 49%	$ 7.50
0%	$10.00

When determining the percent of goal that is met, all rounding shall be down to the nearest whole percent. No penalty shall be waived by the City unless it is determined by the Director to be in the best interests of the City, which determination shall be made after consultation with the LEAP Coordinator.

2. Deposit of Assessments. All assessments imposed pursuant to this section shall be deposited into a separate account and utilized to support the City's pre-apprenticeship and training program. The policies and regulations adopted by the City Manager and Director of Utilities pursuant to this chapter shall address issues pertaining to a Contractor's existing workforce. Contributions need not be made for Labor Hours that have been adjusted in accordance with Section 1.90.040(E).

C. LEAP Reports.

Notwithstanding the provisions of TMC 1.90.100, the Director shall, not less than annually, publish a LEAP report setting forth Contractor compliance with this chapter. Said report shall include information on all contracts and all Contractors to which this chapter applies, and shall detail the level and nature of LEAP participation by contract and by Contractor, The

Director's LEAP report may include such other information as may be helpful to assuring fair and accurate representation of the contracts, Contractors or projects covered in the report. The Director's LEAP reports may be considered by the Board of Contracts and Awards in its determinations as to bidder responsibility.

D. LEAP Goal Adjustments.

1. LEAP utilization goals may be adjusted prior to bid opening and/or as a result of a contract amendment or change order on a Building Project, Civil Project, or Service Contract.

a. If LEAP utilization goals are adjusted prior to bid opening, they shall be set forth in the bid or Request For Proposal advertisement and specification documents or in an addendum timely provided to prospective bidders, provided that such adjustment shall be based upon a finding by the Project Engineer that the reasonable and necessary requirements of the contract render LEAP utilization unfeasible at the required levels. The Director shall concur with the Project Engineer's finding, provided that should the Project Engineer and the Director fail to reach agreement on the Project Engineer's finding, then in that circumstance the matter shall be referred to the City Manager or the Director of Utilities, as appropriate, for ultimate resolution. Notwithstanding any other provision of this chapter to the contrary, the decision of the City Manager or the Director of Utilities with regard to LEAP goal adjustment may not be appealed.

b. If LEAP utilization goals are adjusted due to contract amendment or change order, the amount of adjustment shall be consistent with the utilization goals set forth in this chapter and shall be determined pursuant to regulations adopted pursuant to this chapter for administration of LEAP utilization goal adjustments.

2. The methodology of determining the appropriate adjustments to LEAP utilization goals shall be determined in consultation with the LEAP Advisory Committee, established pursuant to this ordinance for so long as the LEAP Advisory Committee remains in existence.

3. LEAP utilization goals shall not apply to those portions of a project that are funded by sources other than (a) City funds, or (b) funds which the City expends or administers in accordance with the terms of a grant to the City, provided that the Project Engineer shall notify the Director of such non-application prior to bid advertisement. For the purposes of this paragraph, credits extended by another entity for the purpose of providing project funding shall not be considered to be City funds.

E. Utilization - Electrical Projects Outside Electrical Service Area.

Civil Projects or Building Projects that are constructed primarily for the benefit or use by the City's Electrical Utility, which are wholly situated outside the Electrical Service Area, and for which the estimated cost is less than $1,000,000.00, are exempt from the requirements of this chapter.

F. Utilization - Water Projects Outside Water Service Area.

Civil Projects or Building Projects that are constructed primarily for the benefit or use by the City's water utility, which are wholly situated outside the Water Service Area, and for which the estimated cost is less than $1,000,000.00 are exempt from the requirements of this chapter.

G. Utilization - Projects Outside Tacoma Public Utilities Service Area.

Civil Projects or Building Projects that are constructed primarily for the benefit or use by Tacoma Public Utilities, which are wholly situated outside the retail service area of the Tacoma Public Utilities Service Area, and for which the estimated cost is less than $1,000,000.00 are exempt from the requirements of this chapter. Projects wholly situated outside the Tacoma Public Utilities Service Area, and for which the estimated cost is more than $1,000,000.00, shall be exempt from 15% utilization goal specified in subsection A1. of this section. The 15% utilization goal specified in subsection A2. of this section may be met if project work is performed by Apprentices who are enrolled in a course of training specific to a particular construction trade or craft, provided such training has been approved by the Washington State Apprenticeship and Training Council in accordance with Chapter 49.04, RCW.

H. Emergency.

This chapter shall not apply in the event of an Emergency. For the purposes of this section, an "Emergency" means unforeseen circumstances beyond the control of the City that either: (a) present a real, immediate threat to the proper performance of essential functions; or (b) will likely result in material loss or damage to property, bodily injury, or loss of life if immediate action is not taken.

I. Conflict with State or Federal Requirements.

If any part of this chapter is found to be in conflict with federal or state requirements which are a prescribed condition to the allocation of federal or state funds to the City, then the conflicting part of this chapter is inoperative solely to the extent of the conflict and with respect to the City departments directly affected. This provision does not affect the operation of the

remainder of this chapter. Administrative rules or regulations adopted under this chapter shall meet federal and state requirements which are a necessary condition to the receipt of federal or state funds by the City.

(Ord. 28520 Ex. A; passed Jul. 17, 2018: Ord. 28147 Ex. B; passed May 7, 2013: Ord. 27815 Ex. A; passed Jun. 30, 2009: Ord. 27368 § 2; passed Jun. 21, 2005: Ord. 26992 § 1; passed Oct. 15, 2002: Ord. 26698 § 2; passed Sept. 12, 2000: Ord. 26301 § 1; passed Oct. 6, 1998)

1.90.050 *Repealed by Ord. 27368.* Good faith efforts.

(Ord. 27368 § 3; passed Jun. 21, 2005: Ord. 26698 § 3; passed Sept. 12, 2000: Ord. 26301 § 1; passed Oct. 6, 1998)

1.90.060 Effect of program on prime contractor/service provider - subcontractor relationship.

The LEAP Program shall not be construed so as to modify or interfere with any relationship between any Contractor or Service Provider and Subcontractor. The LEAP Program shall not grant the City any authority to control the manner or method of accomplishing any construction work that is additional to any authority retained by the City in a Public Works contract.

(Ord. 26698 § 4; passed Sept. 12, 2000: Ord. 26301 § 1; passed Oct. 6, 1998)

1.90.070 Apprentice utilization requirements – Bidding and contractual documents.

All packages of bid documents for every Building Project and every Civil Project shall incorporate provisions satisfactory to the City Attorney so as to allow enforcement of the provisions contained in this Chapter. Such contractual provisions may include liquidated damages, calculated to reimburse the City for the Contractor's breach of these performance requirements, which shall be published with the City's call for bids.

(Ord. 26301 § 1; passed Oct. 6, 1998)

1.90.080 Enforcement.

A. The Director shall review the Contractor's or Service Provider's and all Subcontractor's employment practices during the performance of the work for compliance with LEAP Program requirements. On-site visits may be conducted as necessary to verify compliance with the requirements of the LEAP Program. The Contractor, Service Provider, or Subcontractors shall not deny to the City the right to interview its employees, provided that the Director shall make reasonable efforts to coordinate employee interviews with employers.

B. Any knowing failure or refusal to cooperate in compliance monitoring may disqualify the defaulting Contractor, Service Provider, or Subcontractor from eligibility for other City contracts.

C. The making of any material misrepresentation may disqualify the defaulting Contractor, Service Provider, or Subcontractor from eligibility for other City contracts.

D. Any action by the City, its officers and employees, under the provisions of this Chapter may be reviewed by the Board of Contracts and Awards, upon written application of the party so affected. Application shall be made within twenty (20) days of the date of the action upon which the appeal is based, and provided to the City by certified mail or by personal service. Any action taken by the Board of Contracts and Awards may be appealed to the City Council or Public Utility Board, as appropriate, and thereafter if desired, to the Superior Court of Pierce County, Washington, within fifteen (15) days of the previous decision.

(Ord. 26698 § 5; passed Sept. 12, 2000; Ord. 26301 § 1; passed Oct. 6, 1998)

1.90.090 Compliance with applicable law.

Nothing in this Chapter shall excuse a Prime Contractor, Service Provider, or Subcontractor from complying with all relevant federal, state, and local laws.

(Ord. 26698 § 6; passed Sept. 12, 2000; Ord. 26301 § 1; passed Oct. 6, 1998)

1.90.100 Review and reporting.

The City Manager and Director of Utilities shall review the Program on or before January 1, 2000, and every two (2) years thereafter, and shall report to the City Council and Public Utility Board the Manager's and Director's findings, conclusions, and recommendations as to the continued need for the Program, and any revisions thereto that should be considered by the Council and Board.

(Ord. 26301 § 1; passed Oct. 6, 1998)

1.90.105 Authority.

The City Manager and the Director of Utilities shall have authority to jointly adopt policies and regulations consistent with this chapter to implement the LEAP program.

(Ord. 26698 § 7; passed Sept. 12, 2000: Ord. 26301 § 1; passed Oct. 6, 1998)

1.90.110 Interpretation.

This Chapter shall not be interpreted or construed so as to conflict with any state or federal law, nor shall this Chapter be enforced such that enforcement results in the violation of any applicable judicial order.

(Ord. 26301 § 1; passed Oct. 6, 1998)

LOCAL EMPLOYMENT AND APPRENTICESHIP TRAINING PROGRAM (LEAP)

The LEAP office enforces post-award mandatory requirements. Bidders do not have to submit any information in the bid submittal package to be in compliance with LEAP.

Post-award:

- ***Provide information to the LEAP Office (see LEAP contact information below).*** Provide the name and email address of the person(s) who will oversee LEAP utilization and payrolls.
- ***LEAP Employee Verification.*** Proof of residency may be requested for employees who may be LEAP-Qualified and may be able to help meet the LEAP Requirements.
- ***All certified payrolls***. Prime contractor is responsible for ensuring their, and their subcontractors', payrolls are submitted via LCP Tracker. By submitting payrolls in LCP Tracker before the Labor & Industry's website, you can reduce data entry.

The City of Tacoma's LEAP office enforces varying workforce utilization requirements based on City projects based on certain monetary thresholds and project locations.

Local Employment Utilization Requirement - the Prime Contractor performing a qualifying public work or improvement must ensure that 15 percent of the total labor hours worked on the project are performed by journey or apprentice level craft workers who are residents of the City of Tacoma or Economically Distressed Zip Codes.

Apprenticeship Utilization Requirement – the Prime Contractor performing a qualifying public work or improvement must ensure that 15 percent of the total labor hours worked on the project are performed by apprentices who are residents of the Tacoma Public Utilities Service Area.

***Exceptions:** If the project is located outside of the retail service area of the Tacoma Public Utilities Service Area, then Apprentices may come from the county in which the work is performed.

This project is subject to the:

1. **15% Local Employment Utilization Requirement**

LEAP staff can assist contractors in identifying qualified City of Tacoma residents, Economically Distressed Area residents, and Apprentices. Contractors may obtain further information by contacting the City's LEAP Office at (253) 591-5590. The LEAP Office is located in the Tacoma Municipal Building, 747 Market Street, Room 900, Tacoma, WA 98402. www.cityoftacoma.org/leap

City of Tacoma LEAP Office
747 Market Street, Room 900
Tacoma, WA 98402
(253) 591-5590 or leap@cityoftacoma.org
www.cityoftacoma.org/leap

LEAP EMPLOYEE VERIFICATION FORM

Submit upon request from LEAP Office

Contractor/Sub:_____ Specification Number:_____

Project Description:_____

Employee Name:_____ Craft:_____

Ethnic Group (*optional*): ☐ Asian/Pac Isl. ☐ Black ☐ Hispanic ☐ Native American ☐ White ☐ Other

Gender (*optional*): ☐ MALE ☐ FEMALE

Complete Physical Address (No PO Boxes):_____

City:_____ State:_____ Zip:_____Telephone:_____ Date of Hire:_____

Apprenticeship County:_____ Apprentice Registration I.D. *(if applicable):*_____

Age:_____ Copy of DD-214:_____

*********Please fill out entire form for tracking LEAP performance*********

LEAP qualified employee categories: (check all that apply and provide evidence for each check)

_____ a. Resident (journey level or certified apprentice) within the geographic boundaries of the City of Tacoma

_____ b. Resident (journey level or certified apprentice) within Economically Distressed ZIP Codes of the Tacoma Public Utilities Service Area

_____ c. WA State Approved Apprentice living in the Tacoma Public Utilities Service Area (Only valid for projects over $1,000,000)

_____ d. WA State Approved Apprentice *(Only valid for contracts where 100% of work is performed outside of Pierce County)

Signature of Employee:_____ Date:_____

Contractor Representative:_____ Date:_____

LEAP EMPLOYEE VERIFICATION FORM

To be Completed by Contractor or Subcontractor

Please attach a legible copy of one or more of the following document(s) showing the address of residence as proof of local (Tacoma) and/or Economically Distressed Area and/or TPU Service Areas residency. For youth, see first line and for veteran status, see second line.

.....

_____ Driver's License with current address

_____ Utility Bill/Phone Bill/Cell Bill/Cable Bill with current address

_____ Copy of current tax form W-4

_____ Rental Agreement/Lease (residential)

_____ Computer Printout From Other Government Agencies

_____ Property Tax Records

_____ Apprentice Registration I.D.

_____ Food Stamp Award Letter

_____ Housing Authority Verification

_____ Insurance Policy (Residence/Auto)

*Any of the above must have a complete physical address verified by the www.govme.org website. No PO Boxes

Contractor Representative:_____ Date:_____

Title:_____

Appendix C: Economically Distressed ZIP Codes Map

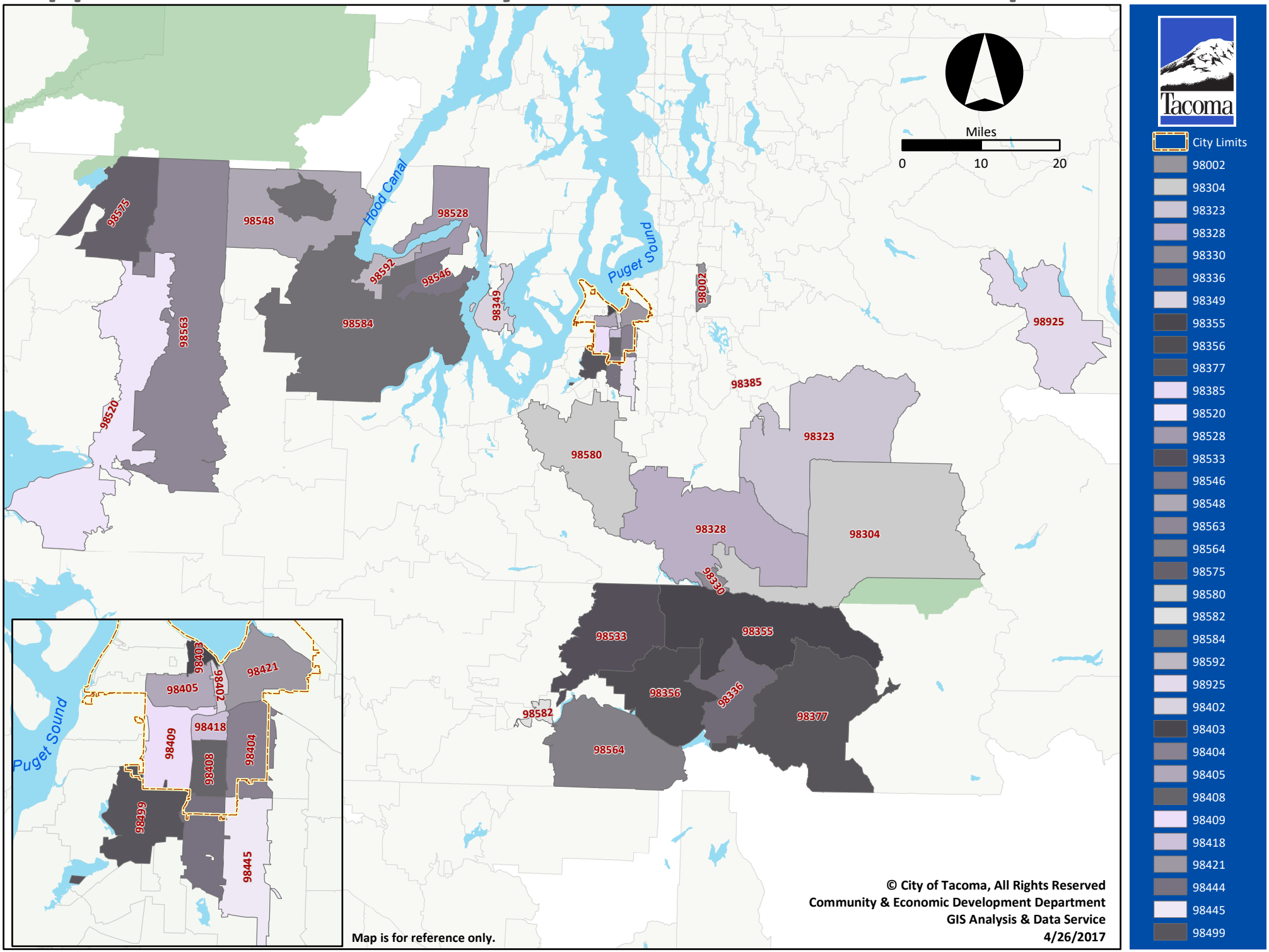

LOCAL EMPLOYEE REQUIREMENT ONLY

City of Tacoma

(Journeyman AND Apprentice)

98402	98421
98403	98422
98404 (some)	98424
98405	98444
98406	98445
98407	98465 (some)
98408	98466 (some)
98409	98467 (some)
98418	

Check addresses here:

https://tacoma.maps.arcgis.com/apps/webappviewer/index.html?id=38107f6b096a4b8280c0d9b8a05bc7eb

LOCAL EMPLOYEE REQUIREMENT ONLY

Economically Distressed Areas

(Journeyman AND Apprentice)

Zip Code	200% Pov	Unemployed	25+ College	Area
98002	Y		Y	Auburn
98304	Y		Y	Ashford/Rainier
98323	Y	Y	Y	Carbonado
98328	Y		Y	Eatonville
98330	Y		Y	Elbe
98336	Y		Y	Glenoma
98349	Y	Y		Lakebay
98355		Y	Y	Mineral
98356	Y	Y	Y	Morton
98377	Y	Y	Y	Randle
98385		Y	Y	South Prairie
98402	Y	Y		Downtown
98403	Y	Y		Stadium/St. Helens
98404	Y	Y		Eastside
98405	Y	Y		Hilltop/Central
98408	Y		Y	South End
98409	Y	Y		South Tacoma
98418	Y		Y	Lincoln/South End
98421	Y	Y	Y	Port
98439	Y	Y		McChord AFB
98444	Y	Y		Parkland
98445	Y		Y	Midland
98499	Y	Y		Lakewood
98520	Y	Y	Y	Aberdeen
98528	Y		Y	Belfair
98533		Y	Y	Cinebar
98546	Y	Y	Y	Grapeview
98548	Y	Y	Y	Hoodsport
98563	Y	Y	Y	Montesano
98564	Y	Y	Y	Mossyrock
98575	Y		Y	Quinault
98580	Y		Y	Roy
98582	Y		Y	Salkum
98584	Y		Y	Shelton
98591	Y		Y	Toledo
98592		Y	Y	Union
98925	Y		Y	Easton

PART V

STATE PREVAILING WAGE RATES

AND

GENERAL REQUIREMENTS

PREVAILING WAGE RATES

This project requires prevailing wages under 39.12 RCW. Any worker, laborer, or mechanic employed in the performance of any part of the work shall be paid not less than the applicable prevailing rate of wage.

The project site is located in Pierce County.

The effective date for prevailing wages on this project will be the **submittal deadline** with these exceptions:

a. If the project is not awarded within six months of the submittal deadline, the award date is the effective date.
b. If the project is not awarded pursuant to a competitive solicitation, the date the contract is executed is the effective date.
c. Janitorial contracts follow WAC 296-127-023.

Except for janitorial contracts, these rates shall apply for the duration of the contract unless otherwise noted in the solicitation.

Look up prevailing rates of pay, benefits, and overtime codes from this link: https://secure.lni.wa.gov/wagelookup/

REQUIRED FILINGS

The contractor and all subcontractors covered under 39.12 RCW shall submit to the Department of Labor and Industries (L&I) for work provided under this contract:

1. A Statement of Intent to Pay Prevailing Wages must be filed with and approved by L&I upon award of contract.

2. An Affidavit of Wages Paid must be filed with and approved by L&I upon job completion.

Payments cannot be released by the City until verification of these filings are received by the engineer. Additional information regarding these filings can be obtained by calling the Department of Labor & Industries, Prevailing Wage at 360-902-5335, https://www.lni.wa.gov/ or by visiting their MY L&I account.

CITY OF TACOMA
INSURANCE REQUIREMENTS FOR CONTRACTS

This Insurance Requirements shall serve as an attachment and/or exhibit form to the Contract. The Agency entering a Contract with City of Tacoma, whether designated as a Supplier, Contractor, Vendor, Proposer, Bidder, Respondent, Seller, Merchant, Service Provider, or otherwise referred to as "Contractor".

1. GENERAL REQUIREMENTS

The following General Requirements apply to Contractor and to Subcontractor(s) performing services and/or activities pursuant to the terms of this Contract. Contractor acknowledges and agrees to the following insurance requirements:

1.1. Contractor shall not begin work under the Contract until the required insurance has been obtained and approved by the City of Tacoma.

1.2. Contractor shall keep in force during the entire term of the Contract, at no expense to the City of Tacoma, the insurance coverage and limits of liability listed below and for Thirty (30) calendar days after completion of all work required by the Contract, unless otherwise provided herein.

1.3. Liability insurance policies, except for Professional Liability and Workers' Compensation, shall:

- 1.3.1. Name the City of Tacoma and its officers, elected officials, employees, and agents as **additional insured**
- 1.3.2. Be considered primary and non-contributory for all claims with any insurance or self-insurance or limits of liability maintained by the City of Tacoma
- 1.3.3. Contain a "Waiver of Subrogation" clause in favor of City of Tacoma
- 1.3.4. Include a "Separation of Insureds" clause that applies coverage separately to each insured and additional insured
- 1.3.5. Name the "City of Tacoma" on certificates of insurance and endorsements and not a specific person or department
- 1.3.6. Be for both ongoing and completed operations using Insurance Services Office (ISO) form CG 20 10 04 13 and CG 20 37 04 13 or the equivalent
- 1.3.7. Be satisfied by a single primary limit or by a combination of a primary policy and a separate excess umbrella

1.4. A notation of coverage enhancements on the Certificate of Insurance shall not satisfy these requirements below. Verification of coverage shall include:

- 1.4.1. An ACORD certificate or equivalent
- 1.4.2. Copies of requested endorsements

1.5. Contractor shall provide to City of Tacoma Procurement & Payable Division, prior to the execution of the Contract, Certificate(s) of Insurance and endorsements from the insurer certifying the coverage of all insurance required herein. Contract or Permit number and the City of Tacoma Department must be shown on the Certificate of Insurance.

1.6. A renewal Certificate of Insurance shall be provided electronically prior to coverage expiration via email sent annually to coi@cityoftacoma.org.

1.7. Contractor shall send a notice of cancellation or non-renewal of this required insurance within Thirty (30) calendar days to coi@cityoftacoma.org.

1.8. “Claims-Made” coverages, except for pollution coverage, shall be maintained for a minimum of three years following the expiration or earlier termination of the Contract. Pollution coverage shall be maintained for six years following the expiration of the Contract. The retroactive date shall be prior to or coincident with the effective date of the Contract.

1.9. Each insurance policy must be written by companies licensed or authorized (or issued as surplus line by Washington surplus line broker) in the State of Washington pursuant to RCW 48 with an (A-) VII or higher in the A.M. Best key rating guide.

1.10. Contractor shall not allow any insurance to be cancelled, voided, suspended, or reduced in coverage/limits, or lapse during any term of this Contract. Otherwise, it shall constitute a material breach of the Contract.

1.11. Contractor shall be responsible for the payment of all premiums, deductibles and self-insured retentions, and shall indemnify and hold the City of Tacoma harmless to the extent such a deductible or self-insured retained limit may apply to the City of Tacoma as an additional insured. Any deductible or self-insured retained limits in excess of Twenty Five Thousand Dollars ($25,000) must be disclosed and approved by City of Tacoma Risk Manager and shown on the Certificate of Insurance.

1.12. City of Tacoma reserves the right to review insurance requirements during any term of the Contract and to require that Contractor make reasonable adjustments when the scope of services changes.

1.13. All costs for insurance are included in the initial Contract and no additional payment will be made by City of Tacoma to Contractor.

1.14. Insurance coverages specified in this Contract are not intended and will not be interpreted to limit the responsibility or liability of Contractor or Subcontractor(s).

1.15. Failure by City of Tacoma to identify a deficiency in the insurance documentation or to verify coverage or compliance by Contractor with these insurance requirements shall not be construed as a waiver of Contractor’s obligation to maintain such insurance.

1.16. If Contractor is a government agency or self-insured for any of the above insurance requirements, Contractor shall be liable for any self-insured retention or deductible portion of any claim for which insurance is required. A certification of self-insurance shall be attached and incorporated by reference and shall constitute compliance with this Section.

2. SUBCONTRACTORS

It is Contractor's responsibility to ensure that each subcontractor obtain and maintain adequate liability insurance coverage that applies to the service provided. Contractor shall provide evidence of such insurance upon City of Tacoma’s request. Failure of any subcontractor to comply with insurance requirements does not limit Contractor’s liability or

responsibility.

3. REQUIRED INSURANCE AND LIMITS

The insurance policies shall provide the minimum coverages and limits set forth below. Providing coverage in these stated minimum limits shall not be construed to relieve Contractor from liability in excess of such limits.

3.1 Commercial General Liability Insurance
Contractor shall maintain Commercial General Liability Insurance policy with limits not less than One Million Dollars ($1,000,000) each occurrence and Two Million Dollars ($2,000,000) annual aggregate. This policy shall be written on ISO form CG 00 01 04 13 or its equivalent and shall include product liability especially when a Contract is solely for purchasing supplies. It includes Products and Completed Operations for three years following the completion of work related to performing construction services. It shall be endorsed to include: A per project aggregate policy limit (using ISO form CG 25 03 05 09 or equivalent endorsement)

3.2 Commercial (Business) Automobile Liability Insurance
Contractor shall maintain Commercial Automobile Liability policy with limits not less than One Million Dollars ($1,000,000) each accident for bodily injury and property damage and bodily injury and property damage coverage for owned (if any), non-owned, hired, or leased vehicles. Commercial Automobile Liability Insurance shall be written using ISO form CA 00 01 or equivalent. Contractor must also maintain MCS 90 and CA 99 48 endorsements or equivalent if "Pollutants" are to be transported unless in-transit Pollution coverage is covered under required Contractor's Pollution Liability Insurance.

3.3 Workers' Compensation
Contractor shall comply with Workers' Compensation coverage as required by the Industrial Insurance laws of the State of Washington, as well as any other similar coverage required for this work by applicable federal laws of other states. Contractor must comply with their domicile State Industrial Insurance laws if it is outside the State of Washington.

3.4 Employers' Liability Insurance
Contractor shall maintain Employers' Liability coverage with limits not less than One Million Dollars ($1,000,000) each employee, One Million Dollars ($1,000,000) each accident, and One Million Dollars ($1,000,000) policy limit.

3.5 Excess or Umbrella Liability Insurance
Contractor shall provide Excess or Umbrella Liability Insurance with limits not less than Three Million Dollars ($3,000,000) per occurrence and in the aggregate. This coverage shall apply, at a minimum, in excess of primary underlying Commercial General Liability, Employer's Liability, Pollution Liability, Marine General Liability, Protection and Indemnity, and Automobile Liability if required herein.

3.6 Pollution Liability Insurance
Contractor shall maintain Pollution Liability or Environmental Liability Insurance with limits not less than One Million Dollars ($1,000,000) each occurrence and Two Million Dollars ($2,000,000) in the aggregate. Coverage shall include investigation and defense costs for bodily injury and property damage, loss of use of damaged or destroyed property, Natural Resource Damage, and Hazardous Substance Removal. Such coverage shall provide both on-site and off-site cleanup costs, cover gradual and sudden pollution, and include in its scope of coverage the City of Tacoma damage claims for loss arising out of Contractor's work.

3.7 Installation Floater Insurance
Contractor shall maintain during the term of the Contract, at its own expense, Installation

Floater Insurance covering Contractor's labor, materials, and equipment to be used for completion of the work performed under this Contract against all risks of direct physical loss, excluding earthquake and flood, for an amount equal to the full amount of the Contract improvements.

3.8 Builder's Risk Insurance

Contractor shall maintain during the term of the Contract and until final acceptance of the work by the City of Tacoma, a policy of Builder's Risk Insurance providing coverage for all-risk of physical injury to all structures to be constructed according to the Contract. City of Tacoma shall be included as a named insured (not named as additional insured) on the policy. Builder's Risk Insurance policy shall:

3.8.1 Have a deductible of no more than Five Thousand Dollars ($5,000) for each occurrence, the payment of which will be the responsibility of Contractor. Any increased deductibles accepted by City of Tacoma will remain the responsibility of Contractor

3.8.2 Be on an ISO Special Form Causes of Loss or the equivalent and also include coverage for Collapse, Earthquake and Flood. The deductible for Earthquake and Flood may be higher than the $5,000 deductible required in 3.18.1

3.8.3 Include coverage for temporary buildings, debris removal, and damage to materials in transit or stored off-site

3.8.4 Be written in the amount of the completed value of the structures, with no coinsurance provisions exposure on the part of Contractor or City of Tacoma

3.8.5 Contain a Waiver of Subrogation provision whereby each insured waives their subrogation rights to the extent the loss is covered by this insurance

3.8.6 Grant permission to occupy, allowing the building or structure to be partially occupied prior to completion, without detrimental effect to the coverage provided

3.8.7 Include coverage for the testing and startup of the building's operating systems

3.8.8 Include coverage for City of Tacoma's loss of use or business interruption arising out of a covered loss which delays completion

3.8.9 Include resultant damage coverage for loss due to faulty workmanship and defective material

3.8.10 Include coverage for startup and testing

3.8.11 Include coverage for resultant damage coverage for loss due to faulty workmanship and defective material

Contractor and City of Tacoma waive all rights against each other, their respective subcontractors, agents, and representatives for damages caused by fire or other perils to the extent covered by Builder's Risk Insurance or other property insurance applicable to the work. The policies shall provide such waivers by endorsement or otherwise.

3.9 Other Insurance

Other insurance may be deemed appropriate to cover risks and exposures related to the scope of work or changes to the scope of work required by City of Tacoma. The costs of such necessary and appropriate Insurance coverage shall be borne by Contractor.